MODEL TR130

(Energy Recovery Ventilators (ERV))

2100 HVI CERTIFIED

c UL us LISTED
DUCTED HEAT
RECOVERY VENTILATOR
89S5

Specifications

Ventilation Type: Static Plate, Heat and Humidity Transfer				
Typical Airflow Range: 50-140 CFM				
Unit may be mounted in any orientation				
Number Motors: One, 0.1 hp				
V	**Hz**	**Phase**	**Input Watts**	**FLA**
120	60	Single	121 @ 124 CFM	1.2
Control Voltage: 24 VAC				
Filters: MERV 8, spun polyester media. 10-1/2" x 10-1/2" x 1"				
Weight: 49 lbs (unit), 58 lbs (in carton)				
Shipping Dimensions: 21" W x 32" L x 17-1/2" H				
Options: SPTL - Percentage Timer Control SPBL - Push Button Point-of-Use Control SFM Percentage Timer Control with Furnace Interlock SHW-20 - Dehumidistat Control				

Core Performance

Airflow CFM	ESP in H_2O	Temp EFF%	Total EFF% Winter/Summer*
52	0.70	83	75/60
69	0.60	80	72/57
94	0.50	76	67/52
113	0.40	73	64/48
132	0.30	70	60/44
141	0.20	68	59/43
148	0.10	67	57/41

* Contact Factory for HVI certification report for complete certified rating.

Dimensions

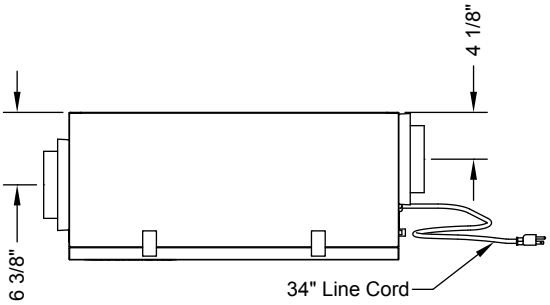

EA: Exhaust Air to outdoors
OA: Outdoor Air intake
RA: Room Air to be exhausted
FA: Fresh Air to inside

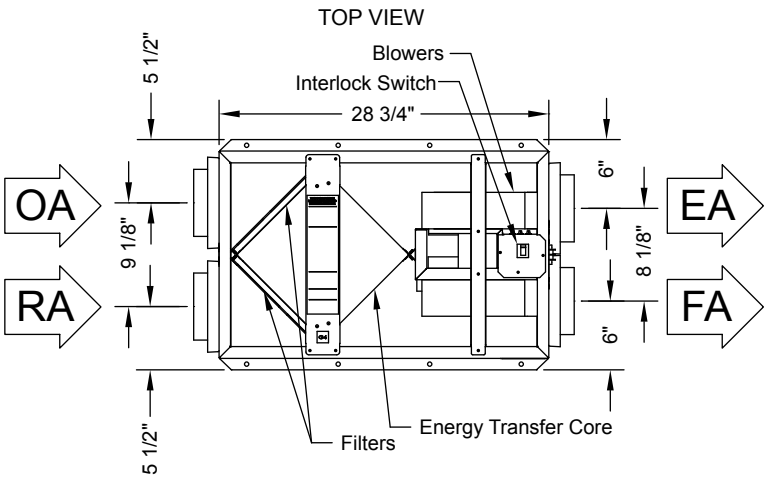

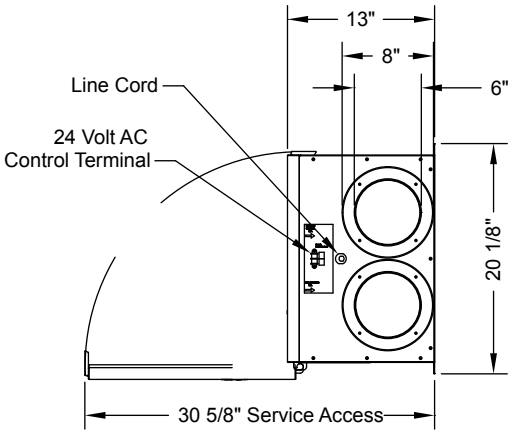

an EefaCo. Store
1-877-275-9111

Soler&Palau Ventilation Group