SINK SPECIFICATIONS

Glass Vessel Sink
Model VG07042

kitchensource.com
1.800.667.8721

MODEL VG07042

FEATURES

· Solid tempered glass
· Standard drain opening
· Glass measures 1/2" thick
· Above counter installation

PACKING LIST

· Vessel sink

DIMENSIONS

MODEL #	SINK DIAMETER	SINK HEIGHT	HOLE DIAMETER
VG07042	16 1/2"	6 "	1 3/4"

For warranty purposes contact our toll free number:

TOLL FREE: (866) 591 - 7792

E-Mail: techmail@vigoindustries.com

www.vigoindustries.com

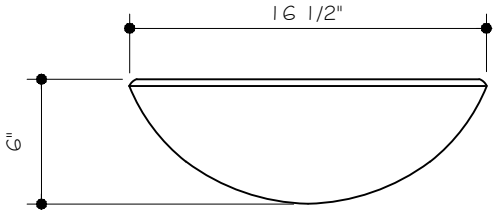

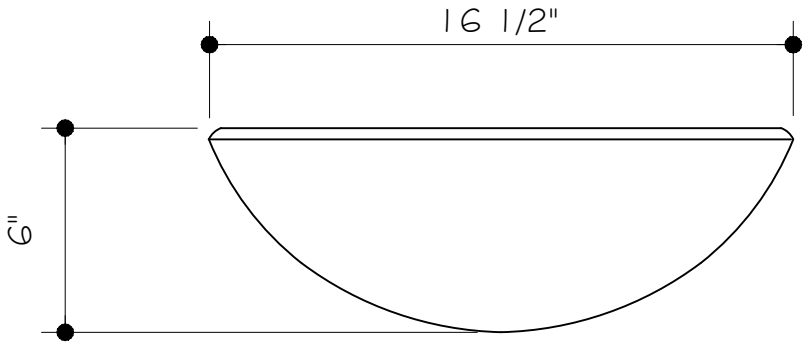

FRONT VIEW

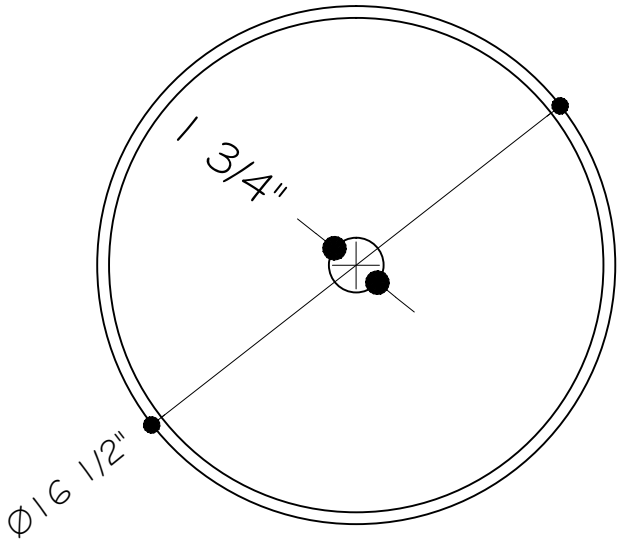

TOP VIEW

NOTE: DRILL HOLL SIZE IN CONTERTOP Ø1 3/4"
GLASS THICKNESS 1/2"
GLASS DIAMETER AND HEIGHT MAY VARY UP TO 1/ 2"

MODEL VG07042

THE MEASUREMENTS IN INCHES ARE ROUNDED TO THE NEAREST 1/8"

PACKAGE CONTENTS

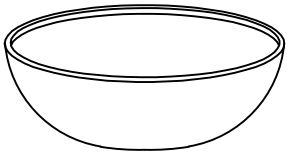

LAVATORY

REQUIRED TOOLS

Plumber's putty or Caulk
Caulking Gun
Tape Measure

SAFETY TIPS

Observe all local plumbing and building codes.
Risk of personal injury or product damage. Handle with care. Glass can break or chip if the product is handled carelessly.
Prior to installation, unpack the new lavatory and inspect it for damage. Return the lavatory to its protective carton until you are ready to install it.

IMPORTANT POINTS

1. Installation must be done by a qualified, licensed plumber. The contractor must perform a dry fit prior to drilling holes in the counter top for the sink.

2. Drill hole size in countertop for the lavatory is Ø1 3/4".

3. All Vigo vessel bowls are hand made. You may expect variations in color, texture and bowl symmetry. If you notice any obvious variation or defects you should contact your retailer immediately.

MAINTENANCE

To ensure that your installation project goes smoothly, please review these instructions before proceeding.
Your new lavatory is designed for years of trouble-free performance.
Keep it looking new by cleaning it periodically with a soft cloth. Avoid abrasive cleaners, steel wool and harsh chemicals.

REMOVING YOUR OLD LAVATORY

Turn off the water supply. This is done by closing the two shut-off valves located under the lavatory. If there are no shut-off valves leading to the lavatory, you must turn off the water at the main valve. This is usually located in the basement, garage or near the foundation on the outside of the house. It may also be near the water meter. Check to be sure the water is off by turning on the faucet where you are working until the water stops flowing. If you have shut off the main valve in a two-story house or greater, you should open the kitchen faucet and another faucet on the same level. Water will then drain from the entire line. This will help avoid spills. Be sure and close the faucets before you turn on the main valve again. Disconnect the drain pipes. Take off as many sections as possible between the lavatory and the wall or floor to facilitate removal. Place a basin under the work area to catch any water that may still be in the drain.

INSTALLATION

Installation must be done by a qualified licensed plumber.
Prior to installation please read the instructions thoroughly, confirm that all parts are included and visually inspect the unit for any defects.
If you have any questions please contact the Vigo Technical Support Department before proceeding with installation.

ASSEMBLY

1. Please inspect your working surface, making sure it is level and clean.

2. Determine the layout for the sink you desire. It is important to fully "dry" position the sink with your faucet purchase on the countertop. Things to include, but are not limited to;
° Leaving enough clearance behind the faucet for operation of the handle.
° Positioning the faucet so it does not interfere with the sink.
° Checking that the water flow from the faucet makes contact with the sink in the desired position.

3. Mark and drill Ø 1 3/4" hole on countertop for drain placement.

4. The sink can be mounted to the countertop with or without a stand. It is highly recommended that the customer utilize the stand. This will allow for proper cleaning around the exterior of the bowl and will make sure that there is no direct contact between your bowl and desired countertop. The stand is an optional purchase and is not included in with the purchase of the vessel bowl. Note: The stand comes as a free accessory with a Vigo style pop up. If you decide not to purchase the Vigo style pop up, the stand can be purchased through the Vigo technical support department.

5. If a stand is not purchased it is advised to apply a bead of caulk between the bottom of the sink and the countertop. This will prevent movement and ease the leveling process.

ONLY THE SINK IS PROVIDED

Make sure to use the intended style drain / pop-up. The Vigo style vessel bowl does not have an overflow. Therefore the drain / pop-up needs to correspond appropriately.

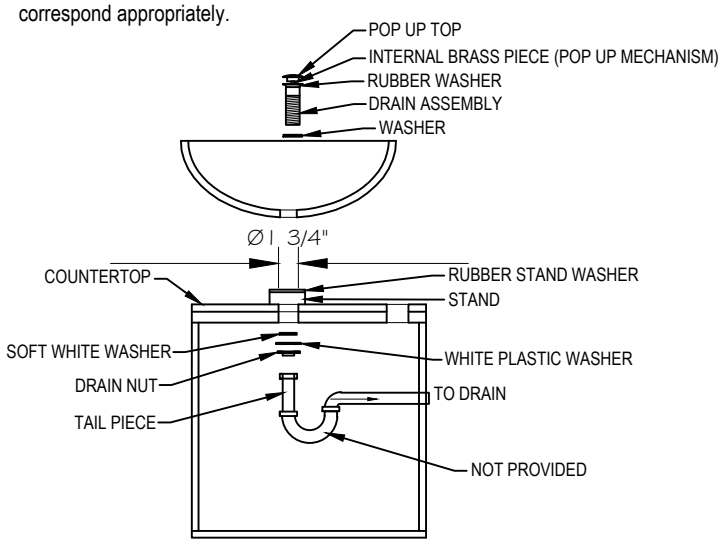

DO NOT OVER TIGHTEN THE DRAIN

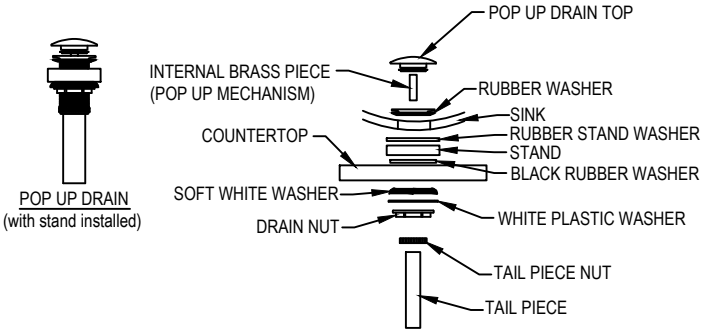

VIGO INDUSTRIES, LLC ("VIGO")
GLASS SINK LIMITED LIFETIME WARRANTY

EFFECTIVE JANUARY 1, 2010

VIGO offers the following limited warranty on each of its Glass Sink products* (the "Product"). This warranty extends only to the original owner or end-user for personal household use. For commercial uses, additional limitations apply.

VIGO warrants the Product to be free from defects in workmanship and materials under normal use and service for the period commencing from the initial date of purchase by the owner or end-user, contractor, or builder, from VIGO or an authorized VIGO dealer, through the lifetime of the original owner or end-user.

Subject to the Warranty Service provision below, any product reported to the authorized dealer or to VIGO as being defective within the warranty period will be repaired or replaced (with a product of equal value) at the option of VIGO. This warranty extends to the original owner or end-user and is not transferable to a subsequent owner.

Neither the distributor, authorized VIGO dealer, nor any other person has been authorized to make any affirmation, representation, or warranty other than those contained in this warranty. Any affirmation, representation, or warranty other than those contained in this warranty shall not be enforceable against VIGO or any other person.

VIGO reserves the right to modify this warranty at any time, it being understood that such modifications will not alter the warranty conditions applicable at the time of sale of the products in question.

Limitations

This warranty shall not apply to instances of incorrect operating procedures, breakages, or damages caused by fault through improper installation, carelessness, abuse, misuse, misapplication, improper maintenance, or alteration of the Product, as well as chemical or natural corrosion, accident, fire, flood, an act of God, or any other casualty. Avoid abrasive cleaners, steel wools, and harsh chemicals as these will scratch, damage, and / or dull the product and / or finish and void this warranty. The owner/end-user of the Product covered by the present warranty is entirely responsible for its proper installation and any applicable plumbing or electrical wiring. VIGO neither installs nor supervises the installation nor hires a contractor for this purpose; consequently, VIGO cannot be held responsible for any default, breakage, or damages caused thereby or resulting thereof, either directly or indirectly.

The owner/end-user must provide access to the components of the Product as described in the installation guide so that VIGO can execute the warranty specified herein. If such access is not available, all expenses to provide said access will be the responsibility of the owner/end-user.

This warranty does not apply to Products that have not been installed or operated in accordance with instructions supplied by VIGO and all applicable rules, regulations, and legislation pertaining to such installations.

This warranty does not apply unless the VIGO Product is installed by fully insured licensed professionals. Vigo strongly recommends that such licensed professionals have experience in the installation of bathroom and kitchen products. Installation of certain products, including, without limitation, glass products (i.e., shower doors and glass sinks) by an inexperienced person may result in glass breakage and, consequently, cause personal injury or death.

VIGO is not liable for personal injuries or deaths to any persons or for any direct, special, incidental, or consequential damage, loss of time, loss of profits, inconvenience, incidental expenses, labor or material charges, or any other costs resulting from the use of the product or equipment or pertaining to the application of the present warranty, or resulting from the removal or replacement of any product or element or part covered by this warranty.

EXCEPT AS OTHERWISE PROVIDED ABOVE, VIGO MAKES NO WARRANTIES, EXPRESSED OR IMPLIED, INCLUDING WARRANTIES OF MERCHANTABILITY AND FITNESS FOR A PARTICULAR PURPOSE OR COMPLIANCE WITH ANY CODE.

In any case, VIGO cannot be held liable for any amount over and above the purchase price paid for the Product by the owner/end-user, contractor, or builder.

Commercial Limitations

In addition to the above conditions and limitations, the warranty period for products installed for commercial applications or used in commercial ventures is one (1) year from the initial date of purchase by the owner/end-user, contractor, or builder from an authorized dealer. VIGO is not responsible for loss of use or profit under any circumstances. If the product is used as a display, the warranty period begins when the product is placed on display. This warranty gives the owner/end-user specific legal rights. The owner/end-user may also have other rights which can vary from one state or province to another.

Warranty Service

In order to obtain service provided under this warranty during regular business hours, contact the dealer or distributor who sold the unit, or contact VIGO directly. VIGO will provide the warranty service described above when the following conditions have been met: the failure is of the nature or type covered by the warranty; the user has informed an authorized VIGO Agent or VIGO's warranty service department representative of the nature of the problem during the warranty period; conclusive evidence (e.g., proof of purchase or installation) is provided to the foregoing by the user proving that the failure occurred or was discovered within the warranty period; an authorized independent service person or company representative has been permitted to inspect the product during regular business hours within a reasonable time after the problem was reported by the user. VIGOs warranty obligation shall be discharged upon tender of replacement or repair. The customer's refusal to accept the tender terminates VIGO's warranty obligations.

*Certain models are pending approval.

Certification may be ended by VIGO or certification agencies without notice.