VANITY SPECIFICATIONS

::kitchensource.com
☎ 1.800.667.8721

VIGO

VANITY COMPONENTS
Model VG09040KM

MODEL VG09040KM

FEATURES

· Freestanding cabinet
· Soft closing cabinet door hardware
· White, single hole ceramic sink
· Cabinet ships assembled
· Mirror included

PACKING LIST

Vanity Assembly
· Screws - 2
· Plastic anchor - 2
Mirror
· Screws - 2
· Plastic anchor - 2
Sink
· Pop-up drain

DIMENSIONS

MODEL #	VANITY WIDTH	VANITY HEIGHT	VANITY DEPTH
VG09040KM	24"	33 3/4"	18 1/4"

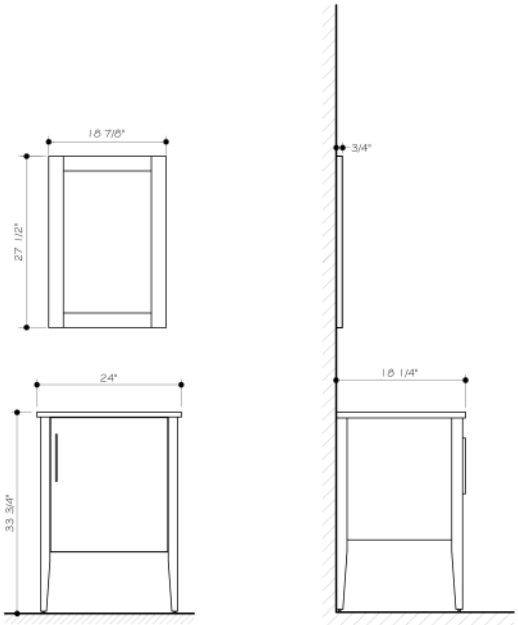

DIMENSIONS

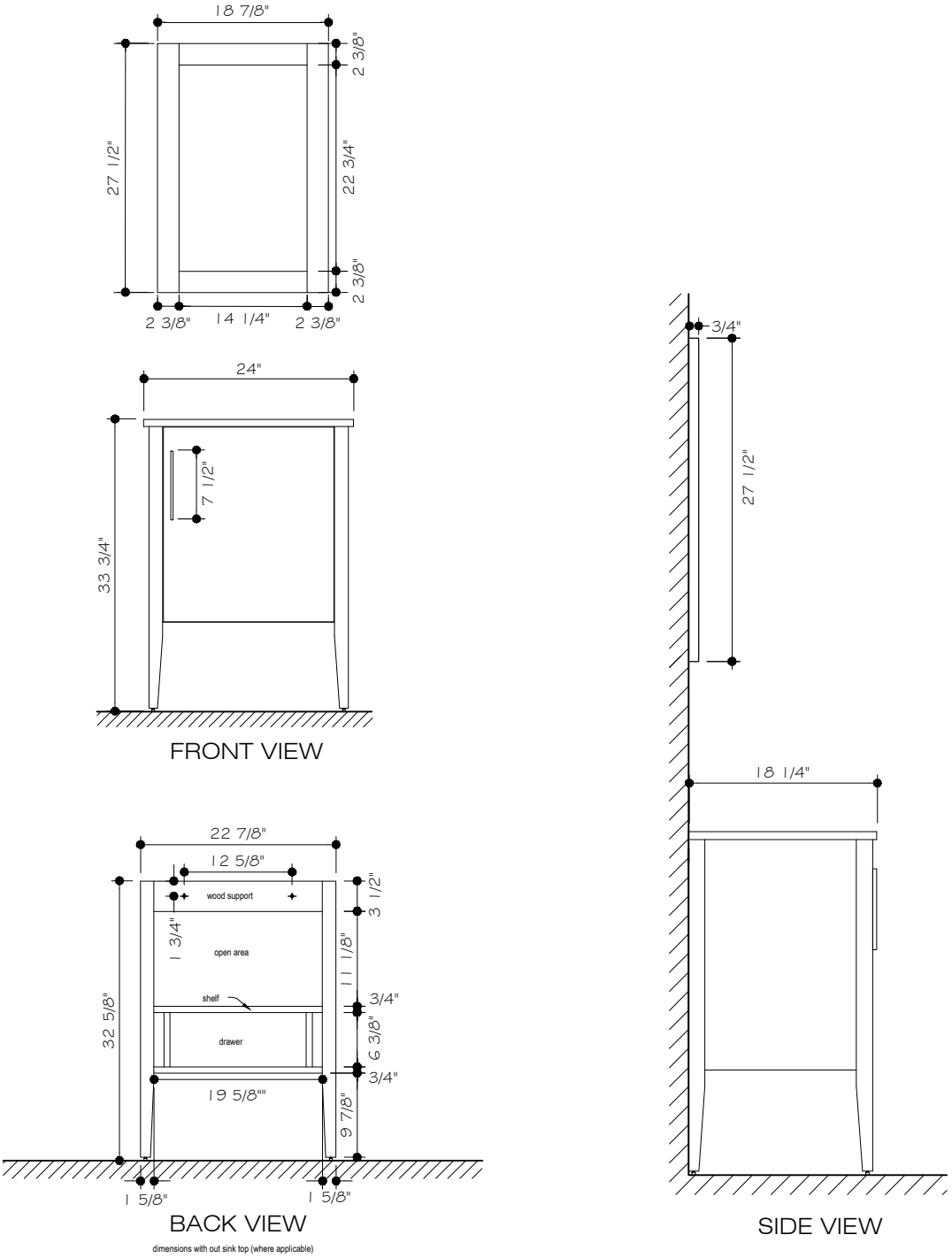

MODEL VG09040KM

THE MEASUREMENTS IN INCHES ARE ROUNDED TO THE NEAREST 1/8"

ROUGHING-IN

::kitchensource.com
☎ 1.800.667.8721

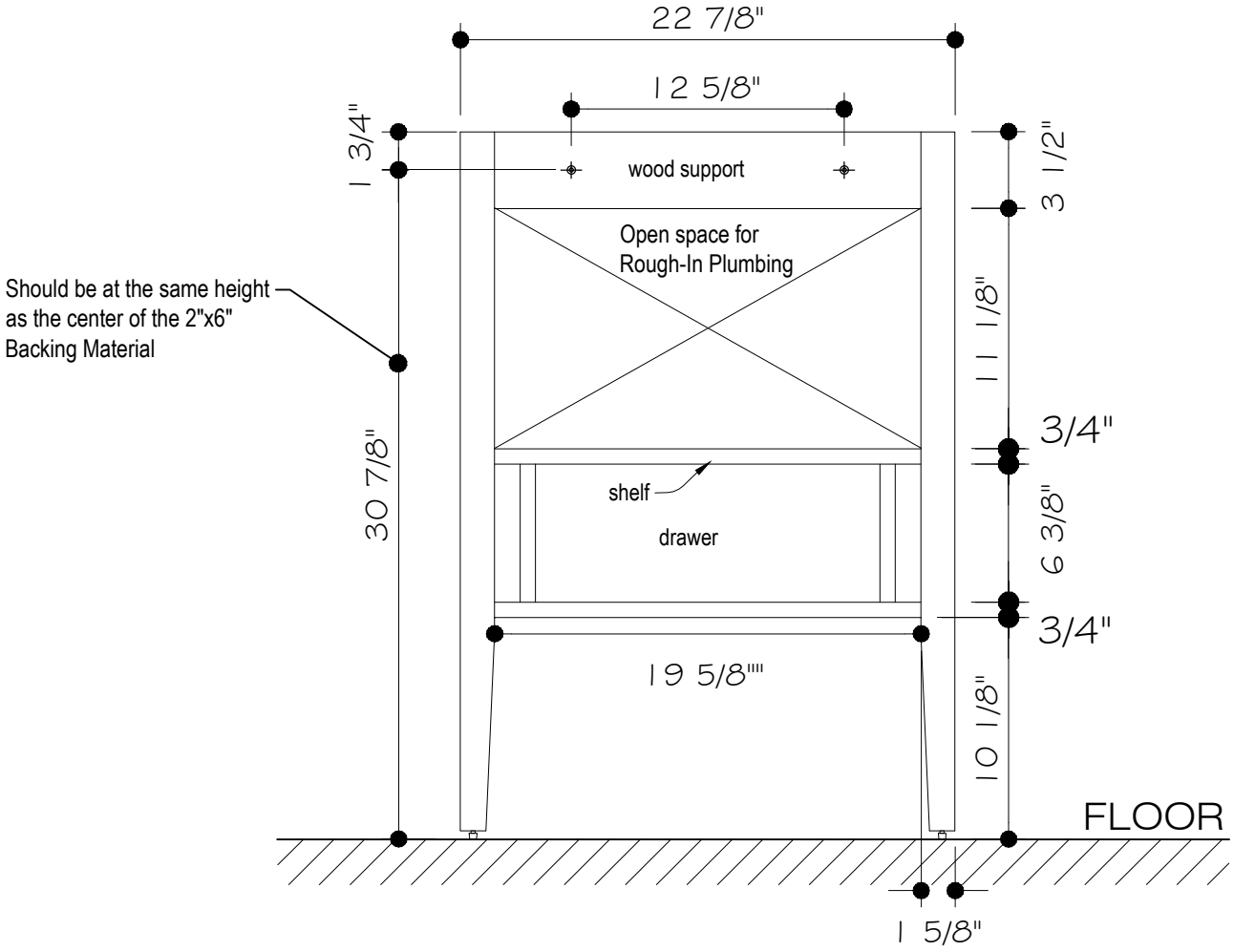

BACK VIEW

MODEL VG09040KM

THE MEASUREMENTS IN INCHES ARE ROUNDED TO THE NEAREST 1/8"

PREPARE SITE

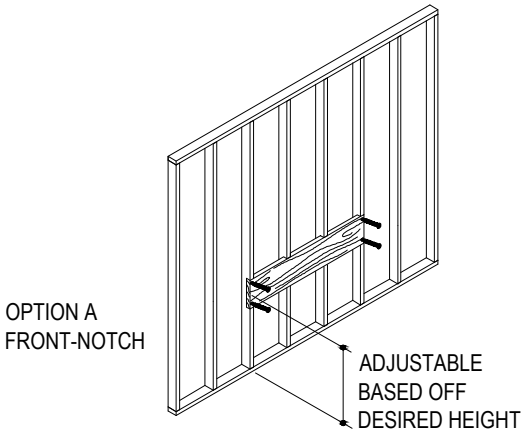

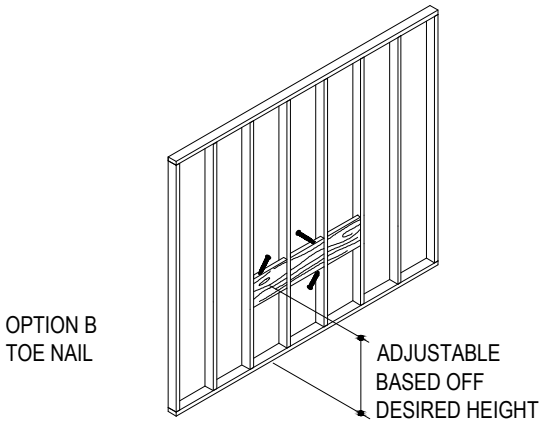

NOTE: This is the recommended installation for wall mount and freestanding vanities.

NOTE: To properly secure the vanity, the center of the required 2x6 backing material must be the correct height from the floor. This will be your desired height

- Measure and mark your desired height up from the floor. Make sure to remove the distance of the top of the vanity without the sink to the center on the 2 mounting vanity brackets, 1 3/4". This will be the height from the floor to the center of the 2x6 backing material. Refer to the vanity and lavatory "Roughing-In" section for proper placement.
- Option A - Front-notch the studs 1 1/2" to ensure the 2x6 backing material is flush against the studs.
- Option B - Toe nail the 2x6 pieces between the open framing. Make sure to cut the sections wide enough to securely fit on center and make sure the 2x6 are flush with the face of the framing to prevent the vanity from sticking too far out or not far enough out.
- Secure the 2x6 backing material to the studs with framing nails.
- Rough in the water supply and drain lines into the rough-in plumbing area of the vanity. Refer to the vanity and lavatory "Roughing-In" section for proper placement. Note: All Rough in material is not included with the vanity.
- Write down the location of the 2x6. This will benefit you when the wall is closed by wall board, tile, etc.

NOTICE: To ensure proper alignment of the lavatory, drawer and door: The finished wall must be straight and plumb. The floor must be flat and perpendicular to the finished wall.

NOTICE: Do not install any moldings that may inhibit the vanity from being flush against the finish wall.

REQUIRED TOOLS

(Not included)

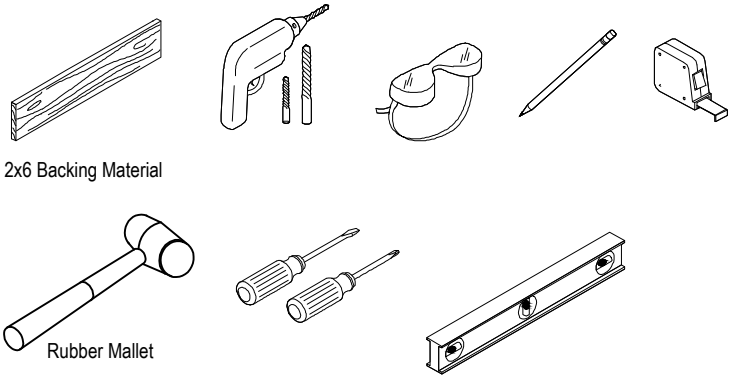

Plus

- Framing Nails
- Siliconized Acrylic Caulk
- Adjustable Wrench
- Plumber's putty or Caulking
- Pipe Tape
- Tubing Cutter or Hacksaw
- Caulking Gun

BEFORE YOU BEGIN

⚠ **WARNING: Risk of property damage.** Do not modify the vanity in any way. Doing so will compromise the structural stability of the vanity and may cause property damage.

NOTICE: Siliconized acrylic caulk **must** be used to secure the lavatory to the vanity. Do not use 100% silicone sealant, which will damage the finish of the vanity.

- Observe all local plumbing and building codes.
- Two people should install this product.

Vigo Industries reserves the right to make revisions in the design of products without notice, as specified in the Price List.

PACKAGE CONTENTS

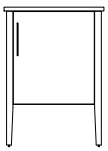

VANITY

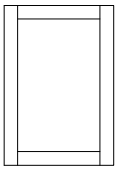

MIRROR

SCREW - 2PC.

PLASTIC ANCHOR - 2PC.

SCREW - 2PC.

PLASTIC ANCHOR - 2PC.

REQUIRED TOOLS

Adjustable wrench
Plumber's putty or Caulking
Pipe tape
Flat screwdriver
Philips Screw Driver
Drill
Tape Measure
Tubing Cutter or Hacksaw
Caulking gun

SAFETY TIPS

Observe all local plumbing and building codes.
Risk of personal injury or product damage will occur if not handled in the proper manner. Always consult your licensed contact with any questions or concerns.
Handle with care. Vitreous china/Glass/Acrylic can break or chip if the product is handled carelessly.
Prior to installation, unpack the new vanity components and inspect it for damage. Return the material to its protective carton until you are ready to install it. Inspect the drain and supply plumbing. Replace if necessary.

CARE AND MAINTENANCE

To ensure that your installation project goes smoothly, please review these instructions before proceeding.
Your new lavatory is designed for years of trouble-free performance.
Keep it looking new by cleaning it periodically with a soft cloth. Avoid abrasive cleaners, steel wool and harsh chemicals.
To protect against scratches, use felt, leather, or cork under all items placed on the wood surface. Do not expose wood furniture to direct sunlight, drying heat sources, or dampness. Dust frequently with a soft cloth in the direction of the grain. Use only products specifically made for cleaning wood. Avoid using oily polishes or waxes, or products containing silicone. Blot spills immediately with a soft, damp cloth.

REMOVING YOUR OLD LAVATORY

Turn off the water supply. This is done by closing the two shut-off valves located under the lavatory.
If there are no shut-off valves leading to the lavatory, you must turn off the water at the main valve. This is usually located in the basement, garage or near the foundation on the outside of the house. It may also be near the water meter. Check to be sure the water is off by turning on the faucet where you are working until the water stops flowing.
If you have shut off the main valve in a two-story house or greater, you should open the kitchen faucet and another faucet on the same level. Water will then drain from the entire line. This will help avoid spills. Be sure and close the faucets before you turn on the main valve again. Disconnect the drain pipes. Take off as many sections as possible between the lavatory and the wall or floor to facilitate removal. Place a basin under the work area to catch any water that may still be in the drain.

INSTALLATION

Installation must be done by a qualified licensed plumber.
Prior to installation please read the instructions thoroughly, confirm that all parts are included and visually inspect the unit for any defects.
If you have any questions please contact the Vigo Technical Support Department before proceeding with installation.

ASSEMBLY

1. Select the vanity location and mark holes on the wall for mounting screws. Remove the vanity, drill holes, stick anchors. Securely screw unit to the wall. This should be drilled into your 2"x6" backing material.

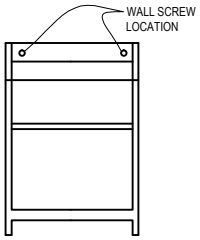

BACK SIDE OF THE VANITY

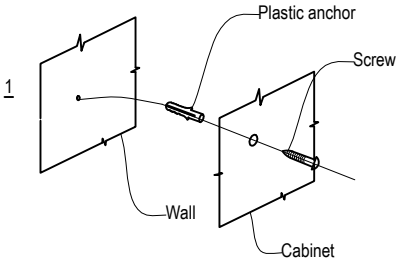

VANITY INSTALLATION

2. For ease of installation it is recommended for you to install the faucet on the sink/top at this point. If you are unable to do so at this point and have to install the faucet at the completion of the vanity see page 6 as this is the needed drawer removal steps for access for completion of installation.

3. Silicone the lavatory to the vanity, align it and press down firmly.

4. Connect Trap to drain assembly. Vigo recommends installing the Vigo brand corresponding sink and pop up. Figure #4 depicts the complete assembly of the Vigo brand sink, vanity and pop up.

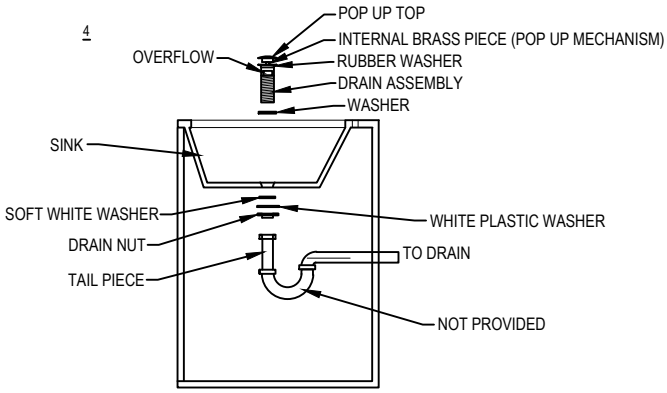

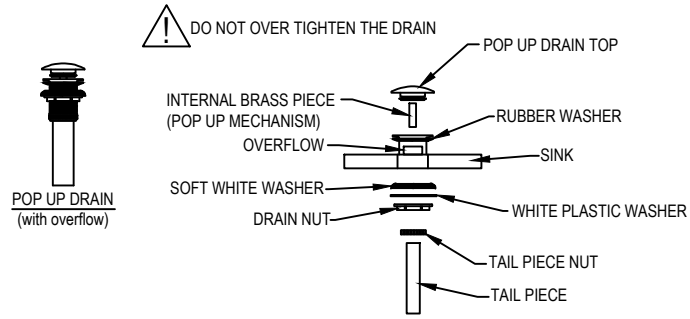

POP UP DRAIN
(with overflow)

5. For specific Faucet installation instructions refer to the Faucet manufacturer's instruction guide. Connect supply line to faucet.

6. Select the mirror location and mark holes on the wall for mounting. Measure from the center holes on the back of the mirror. Measurement should be the distance between the mounting holes. Drill holes, sink anchors and secure screws.

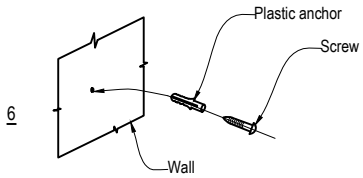

OPTIONAL: STEP 2 OF INSTALLATION INSTRUCTIONS

When installing your faucet it is highly recommended to remove the top drawer. This will allow you to have access to the hollow pin and supply lines of the faucet in order for you to complete your installation. Vigo brand vanities have two typical styles for the drawer assembly. Vigo offers multiple methods for removal of the drawers. Below are the typical methods to remove the top drawer.

OPTION A

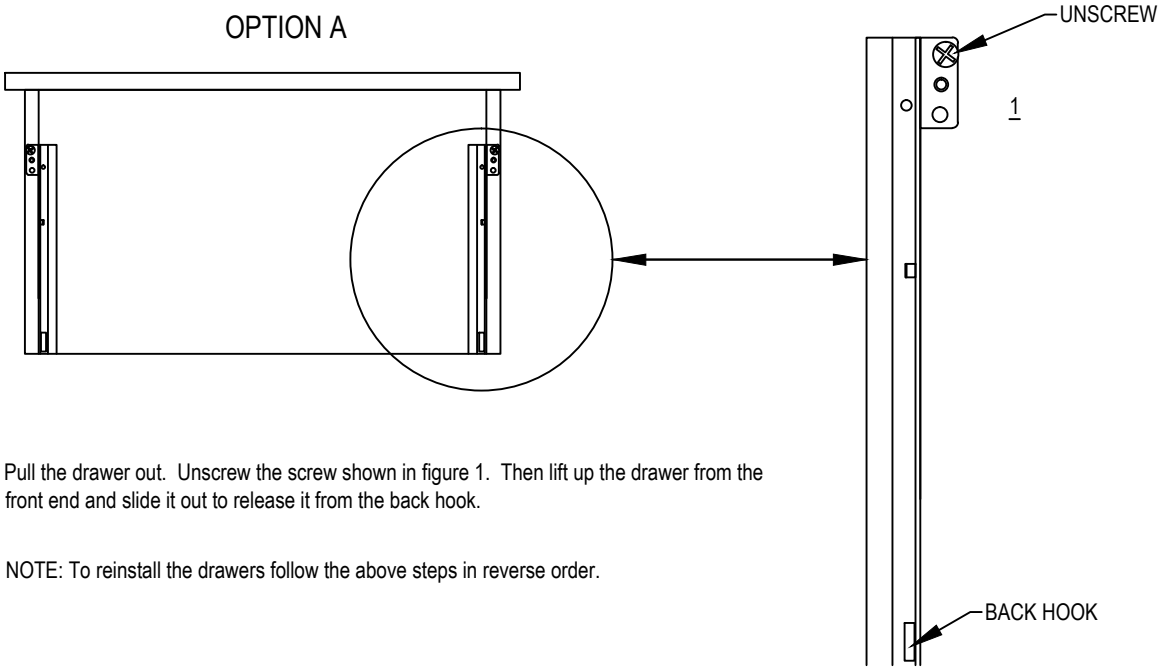

Pull the drawer out. Unscrew the screw shown in figure 1. Then lift up the drawer from the front end and slide it out to release it from the back hook.

NOTE: To reinstall the drawers follow the above steps in reverse order.

OPTION B

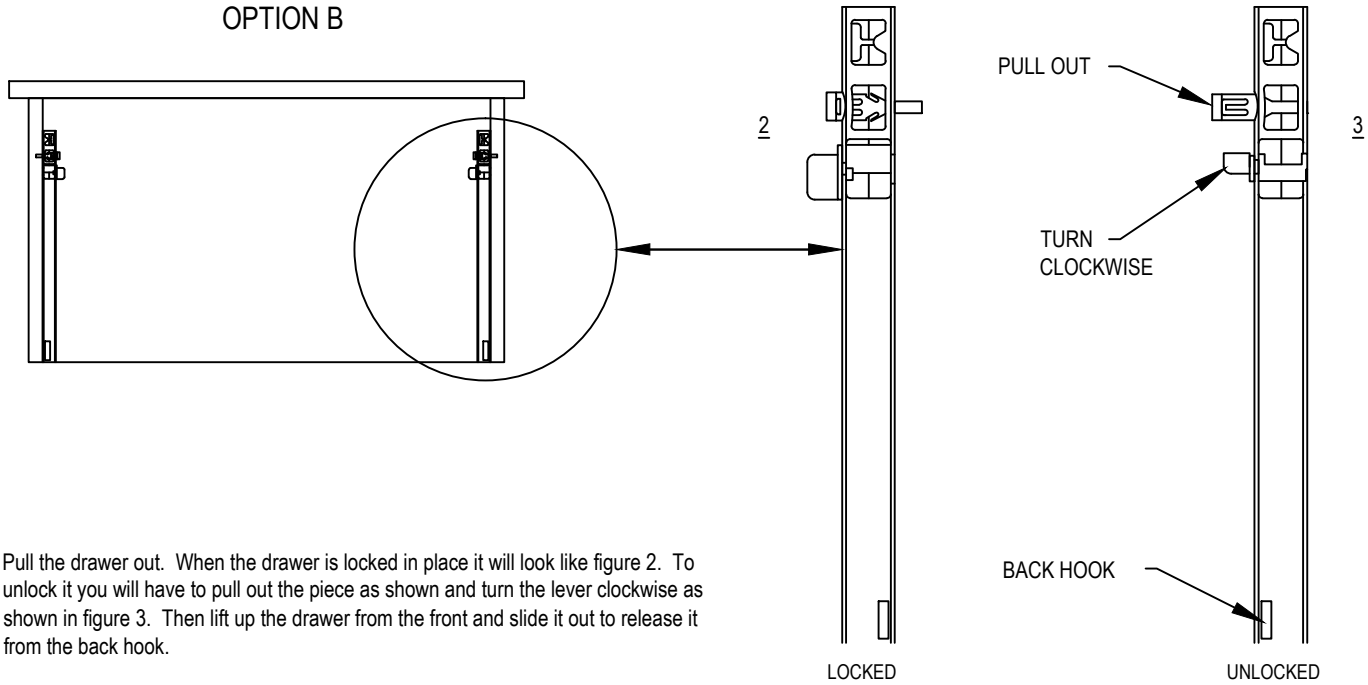

Pull the drawer out. When the drawer is locked in place it will look like figure 2. To unlock it you will have to pull out the piece as shown and turn the lever clockwise as shown in figure 3. Then lift up the drawer from the front and slide it out to release it from the back hook.

NOTE: To reinstall the drawers follow the above steps in reverse order.

VIGO INDUSTRIES, LLC ("VIGO")
VANITY COMPONENTS LIMITED WARRANTY

::kitchensource.com
☎ 1.800.667.8721

VIGO

EFFECTIVE JANUARY 1, 2010

VIGO offers the following limited warranty on each of its Vanity Component products* (the "Product") and the components thereof. This warranty extends only to the original owner or end-user for personal household use. For commercial uses, additional limitations apply.

VIGO warrants the Product to be free from defects in workmanship and materials under normal use and service for a period of five (5) years from the initial date of purchase by the owner or end-user, contractor, or builder, from VIGO or an authorized VIGO dealer.

Subject to the Warranty Service provision below, any product reported to the authorized dealer or to VIGO as being defective within the warranty period will be repaired or replaced (with a product of equal value) at the option of VIGO. This warranty extends to the original owner or end-user and is not transferable to a subsequent owner.

Neither the distributor, authorized VIGO dealer, nor any other person has been authorized to make any affirmation, representation, or warranty other than those contained in this warranty. Any affirmation, representation, or warranty other than those contained in this warranty shall not be enforceable against VIGO or any other person.

VIGO reserves the right to modify this warranty at any time, it being understood that such modifications will not alter the warranty conditions applicable at the time of sale of the products in question.

Limitations

This warranty shall not apply to instances of incorrect operating procedures, breakages, or damages caused by fault through improper installation, carelessness, abuse, misuse, misapplication, improper maintenance, or alteration of the Product, as well as chemical or natural corrosion, accident, fire, flood, an act of God, or any other casualty. Avoid abrasive cleaners, steel wools, and harsh chemicals as these will scratch, damage, and / or dull the product and / or finish and void this warranty. The owner/end-user of the Product covered by the present warranty is entirely responsible for its proper installation and any applicable plumbing or electrical wiring. VIGO neither installs nor supervises the installation nor hires a contractor for this purpose; consequently, VIGO cannot be held responsible for any default, breakage, or damages caused thereby or resulting thereof, either directly or indirectly.

The owner/end-user must provide access to the components of the Product as described in the installation guide so that VIGO can execute the warranty specified herein. If such access is not available, all expenses to provide said access will be the responsibility of the owner/end-user.

This warranty does not apply to Products that have not been installed or operated in accordance with instructions supplied by VIGO and all applicable rules, regulations, and legislation pertaining to such installations.

This warranty does not apply unless the VIGO Product is installed by fully insured licensed professionals. Vigo strongly recommends that such licensed professionals have experience in the installation of bathroom and kitchen products. Installation of certain products, including, without limitation, glass products (i.e., shower doors and glass sinks) by an inexperienced person may result in glass breakage and, consequently, cause personal injury or death.

VIGO is not liable for personal injuries or deaths to any persons or for any direct, special, incidental, or consequential damage, loss of time, loss of profits, inconvenience, incidental expenses, labor or material charges, or any other costs resulting from the use of the product or equipment or pertaining to the application of the present warranty, or resulting from the removal or replacement of any product or element or part covered by this warranty.

EXCEPT AS OTHERWISE PROVIDED ABOVE, VIGO MAKES NO WARRANTIES, EXPRESSED OR IMPLIED, INCLUDING WARRANTIES OF MERCHANTABILITY AND FITNESS FOR A PARTICULAR PURPOSE OR COMPLIANCE WITH ANY CODE.

In any case, VIGO cannot be held liable for any amount over and above the purchase price paid for the Product by the owner/end-user, contractor, or builder.

Commercial Limitations

In addition to the above conditions and limitations, the warranty period for products installed for commercial applications or used in commercial ventures is one (1) year from the initial date of purchase by the owner/end-user, contractor, or builder from an authorized dealer. VIGO is not responsible for loss of use or profit under any circumstances. If the product is used as a display, the warranty period begins when the product is placed on display. This warranty gives the owner/end-user specific legal rights. The owner/end-user may also have other rights which can vary from one state or province to another.

Warranty Service

In order to obtain service provided under this warranty during regular business hours, contact the dealer or distributor who sold the unit, or contact VIGO directly. VIGO will provide the warranty service described above when the following conditions have been met: the failure is of the nature or type covered by the warranty; the user has informed an authorized VIGO Agent or VIGO's warranty service department representative of the nature of the problem during the warranty period; conclusive evidence (e.g., proof of purchase or installation) is provided to the foregoing by the user proving that the failure occurred or was discovered within the warranty period; an authorized independent service person or company representative has been permitted to inspect the product during regular business hours within a reasonable time after the problem was reported by the user. VIGOs warranty obligation shall be discharged upon tender of replacement or repair. The customer's refusal to accept the tender terminates VIGO's warranty obligations.

*Certain models are pending approval.

Certification may be ended by VIGO or certification agencies without notice.