Island Specifications

ISL04R

Island: 36” diameter x 36” with top
Materials: birch solids & MDF
Soft-close undermount drawer slides

Top Preinstalled
Material: 3” maple end grain butcher block with food-safe finish (made in China)

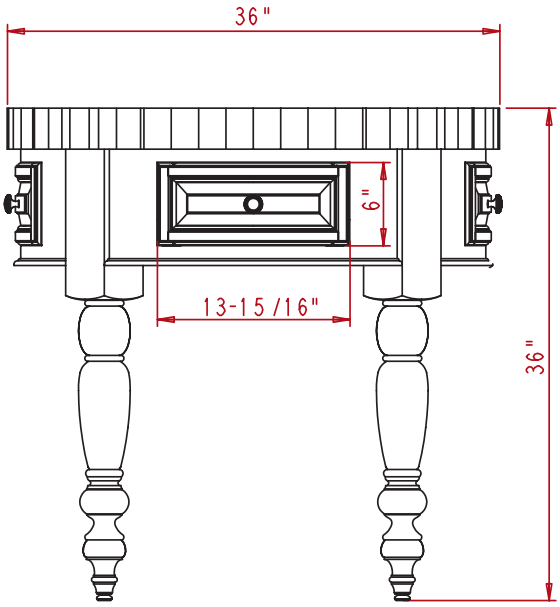

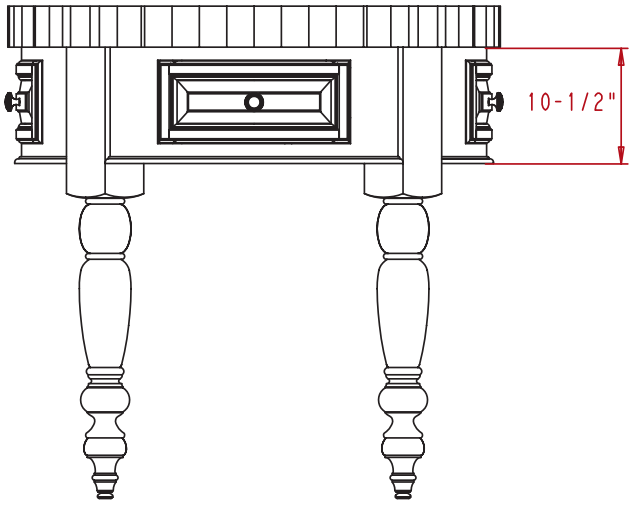

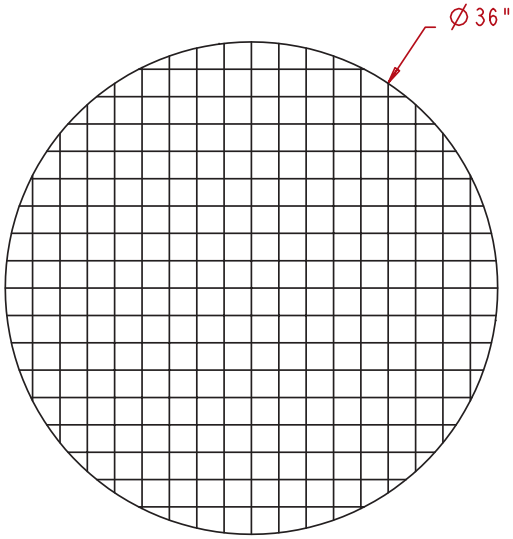

::kitchensource.com
☎ 1.800.667.8721