JULIEN

Donnez vie à vos idées.
Make your ideas real.

SPECIFICATIONS

Category: **Kitchen sinks**

Type: **Topmount Double Bowl**

Collection: **Q100**

MODEL: **066 000 - Black**
066 010 - Brown
066 020 - Beige
066 030 - White

FEATURES:

- Manufactured in Germany
- 80-85% natural quartz content for excellent resistance to scratches and chips
- High-quality acrylic resin providing a highly resistant hardened composite material
- Non-porous material providing excellent stain resistance and ease of maintenance
- Anti-bacterial material with natural silver ions reducing bacterial growth by up to 95%
- Natural sound dampening properties
- Offset 3-1/2" drain placement
- 4 available colours - solid throughout the sink
- Limited lifetime warranty

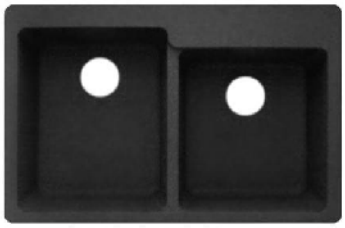

AVAILABLE COLOURS:

Black Brown Beige White

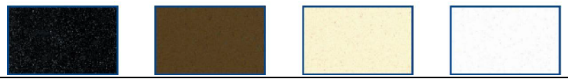

SINK DIMENSIONS:

Model	Overall	Bowl (s)	Depth	Recommended Cabinet size
066 000 **066 010** **066 020** **066 030**	33 x 22	LH 14 1/2 x 18 1/8 RH 14 1/2 x 16 1/8	9 1/2 9 1/2	36

- All dimensions are in inches
- Cutout template supplied with every sink and available on our web site

WARRANTY:

Julien inc. offers a LIMITED LIFETIME WARRANTY on its quartz sinks, ensuring them against defects of material and workmanship. For further details on our product warranty, please refer to our catalog or Web site.

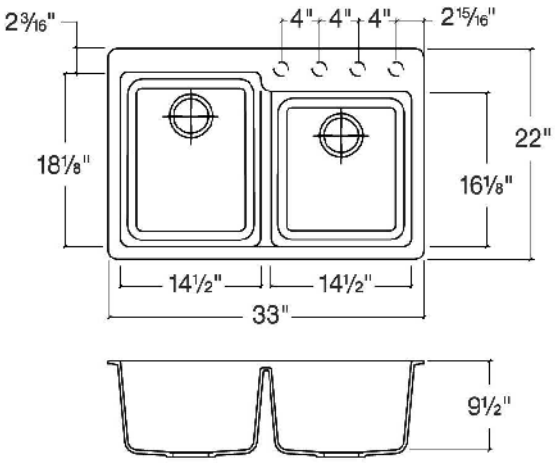

PRODUCT SPECIFICATIONS:

Sink to be topmount double bowl. Sink to be manufactured from a composite of quartz particules, acrylic resin and silver ions. Quartz content must be a minimum of 80% Sink to feature non-porous material and solid colour throughout. Sink overall dimensions to be 33" left-to-right and 22" front-to-back. LH Bowl dimensions to be 14 1/2" left-to-right and 18 1/8" front-to-back. RH Bowl dimensions to be 14 1/2" left-to-right and 16 1/8" front-to-back.Sink to be Julien Q100 collection model 066 000 with bowl depth of 9 1/2" on LH bowl and 9 1/2" on RH bowl.

PROJECT/JOB INFORMATION:

Project/Job name: _____

Specifier: _____

Contractor: _____

This specification is subject to change without notice. Julien assumes no responsibility for the use of superseded or voided specifications.

JULIEN Inc. 935, Lachance St., Quebec (QC), Canada
Phone : 1.866.901.5624 Fax : 1.866.397.9090
www.julien.ca