an EefaCo. Store
1-877-275-9111

HOUZER®
Sinks for Life

MEDALLION GOURMET SERIES

Undermount 60/40 Gourmet Double Bowl
Model MES-3221

FEATURES

- Premium grade T-304 stainless steel
- 10" & 8" depth • 16 gauge
- StoneGuard™ undercoating over Super-Silencer pad
- Lustrous satin with highlighted rim
- Fits 36" sink base • 3-1/2" drain opening
- Supplied with cutout template, fasteners and instructions
- Complies with ASME A112.19.3-2000, UPC®
- Lifetime Limited Warranty

ASME A112.19.3-2000

MES-3221

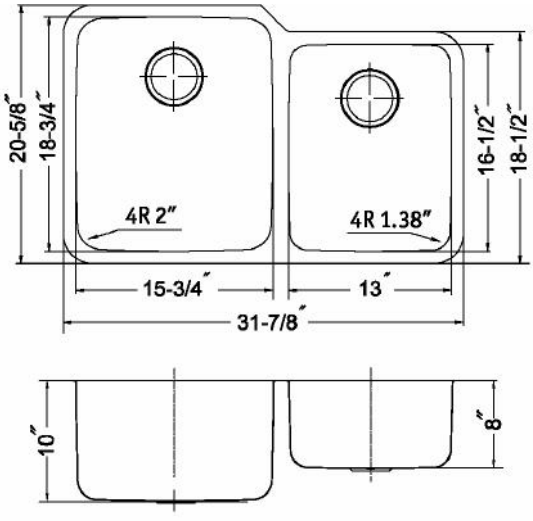

OPTIONAL ACCESSORIES

Bottom Grid: BG-3500
Strainer: 190-9180

OVERALL DIMENSIONS	EACH BOWL	CUTOUT SIZE	PACKAGING*	WEIGHT*
31-7/8" x 20-5/8"	15-3/4" x 18-3/4" 13" x 16-1/2"	See Template	1/16/20 pcs.	28/480/500 lbs.

*Standard packaging: Single boxed /Pallet of single boxed/Pallet of bulk pack.
All dimensions are in inches. Specifications subject to change without notice.

Project/Job name

Architect/Engineer

Contractor

Model Q'ty

Notes
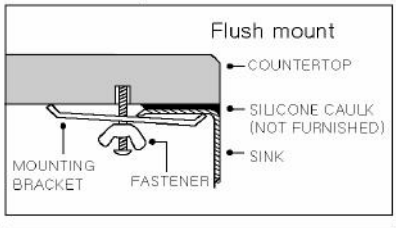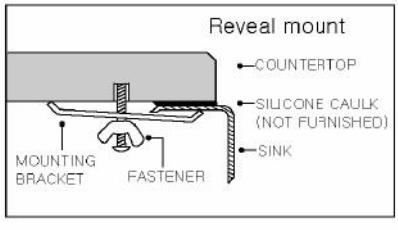
Installation profile