an EefaCo. Store
1-877-275-9111

88 5167 30C

Round Table

(

IMPORTANT NOTE

Carefully remove all the parts from the carton and put them individually on a soft cloth to prevent scratches or other damages occuring to the wood parts.

We have taken great care in the design of this product and request that you carefully and strictly follow our assembly instructions to ensure a completed product as it was designed.

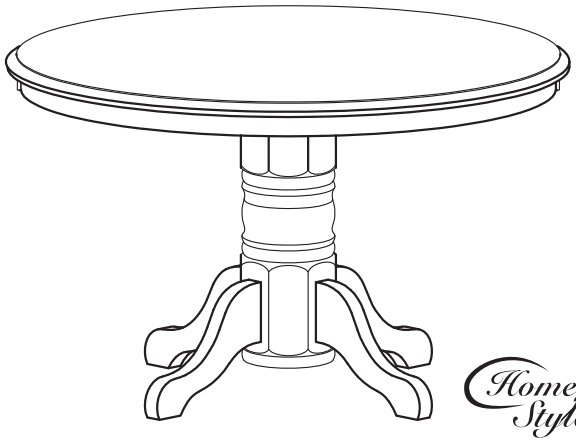

Home Styles™

Casual Attire For Today's Home

PART LIST

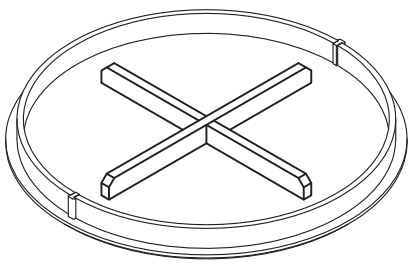

A.
Table Top
1 pc.

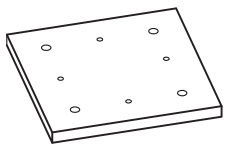

B.
Connector Panel
1 pc.

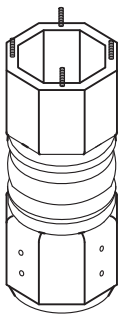

C.
Post
1 pc.

D.
Leg
4 pcs.

HARDWARE LIST

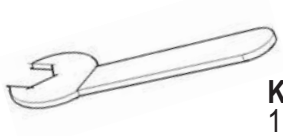

Key Wrench
1 pc.

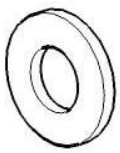

Flat Washer
16 pcs. (+ 1 extra)

Nut
12 pcs. (+1 extra)

Floor Leveler
4 pcs. (+1 extra)

Small Hex Wrench
1 pc.

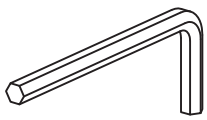

Hex Wrench
1 pc.

Spring Washer
16 pcs. (+1 extra)

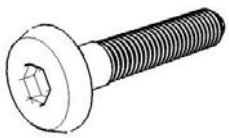

Head Cap Bolt
4 pcs. (+1 extra)

an EefaCo. Store
1-877-275-9111

Assembly Instructions

IMPORTANT

** Do not tighten up all the screws until each part is properly assembled.*

** You should keep Hex Wrench and Key Wrench in a safe place as you may need to tighten up the Head Cap Bolts in the future.*

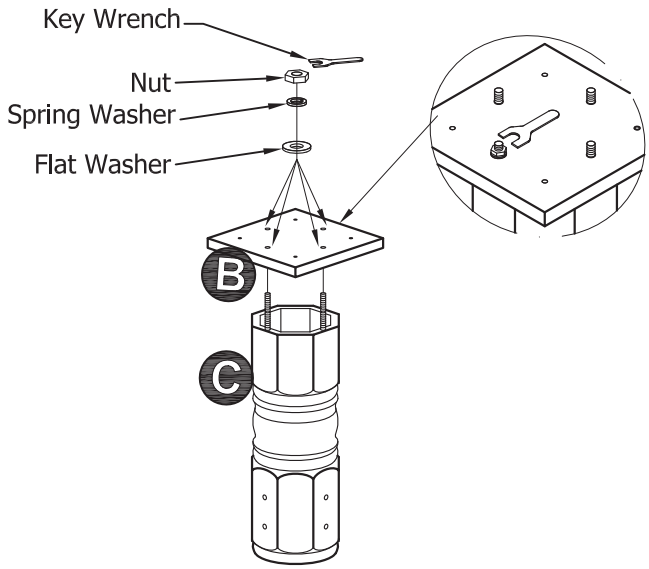

STEP 1

Attach Connect Panel (B) to Post (C), using Flat Washers, Spring Washers and Nuts.

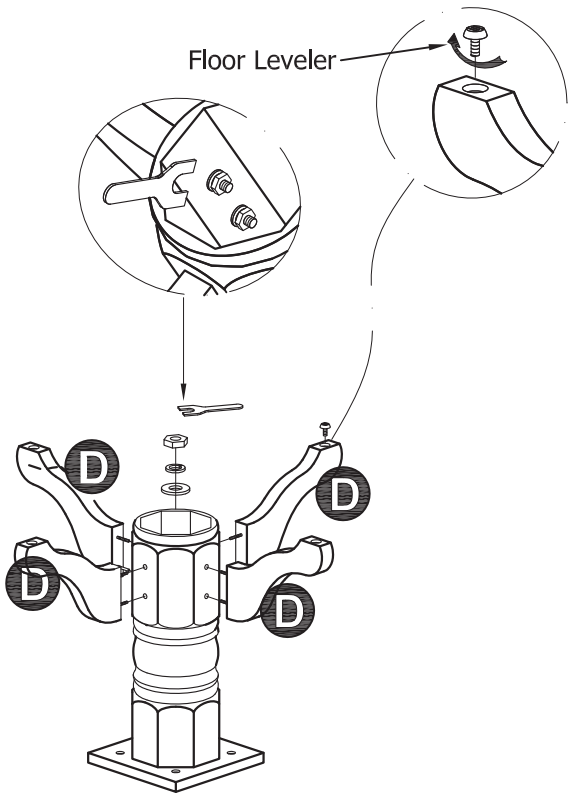

STEP 2

Turn the unit upside down on the soft cloth.

Attach Table Leg (D) to the unit, using Flat Washers, Spring Washers and Nuts.

Insert floor levers into the pre-drilled holes of Leg (D).

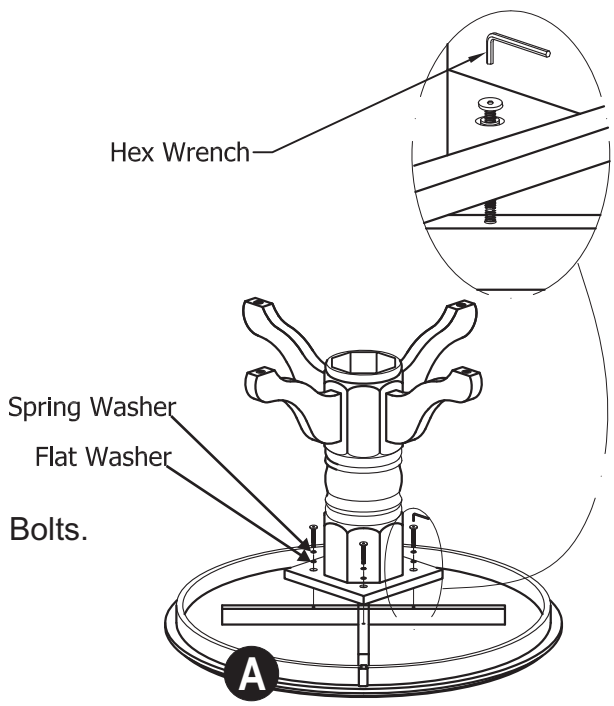

STEP 3

Place the Base Unit in step 2 on to Table Top (A) with Flat Washers, Spring Washers and Head Cap Bolts.

Turn the assembled unit to it's upright position.