::kitchensource.com
☎ 1.800.667.8721

Air King Ventilation Products®

SPECIFICATIONS

# AS70

EXHAUST FAN

HVI® 2100 CERTIFIED

## 70 CFM/4.0 Sones @ 0.10" SP.

- **Grill**
  White, polymeric grill secured in place with torsion springs; easily removed if necessary, dimensions - 10" x 9 1/2".
- **Blower Wheel**
  One piece polymeric wheel, 4 1/2" diameter, 1" wide, with 10 fins.
- **Motor**
  Single coil plug-in, two pole motor, life time lubrication, thermally protected. Rated 120 volts, 60 hz. Rated for continuous use.
- **Fan Housing**
  23 gauge galvanized metal housing, dimensions 7 1/4" x 7 1/4" x 3 3/4", double metal thickness mounting tabs.
- **Duct Collar**
  Plastic collar for 3" duct connection, comes complete with built in non-metallic back draft damper for quiet operation.
- **Ventilating Area**
  For bathrooms up to 70 sq. ft. for other rooms up to 85 sq. ft.
- **Unit Mounting**
  Rated for ceilings insulated to R-40. Designed to mount in ceilings or walls with at least 4" of clearance. The housing will mount through drywall thickness up to 3/4", with a rough-in opening of 7 1/2" x 7 1/2".
- **Single Pack Shipping Info**
  Box Dim: 10 3/4" x 10 1/8" x 4 3/4"
  UPC: 0-8316227311-6
  Shipping Weight: 4 1/2 lbs.

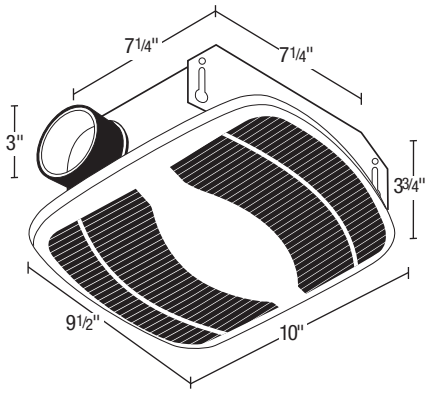


**Acceptable for use over tub or shower when installed in a GFCI protected branch circuit.**

## EXPANDED PERFORMANCE

| | *Static Pressure (inches of w.g.)* | | | | | | | | *Sones @ .1 SP* | *Sones @ .25 SP* | *Fan Speed RPM* | *Power Watts* | *Amps* |
|---|---|---|---|---|---|---|---|---|---|---|---|---|---|
| | 0 | 0.05 | 0.1 | 0.125 | 0.15 | 0.2 | 0.25 | 0.3 | | | | | |
| ***Air Flow - CFM*** | 75 | 70 | 69 | 67 | 65 | 62 | 59 | 52 | 4.0 | 4.0 | 2175 | 50 | .9 |

| | | | |
|---|---|---|---|
| **PROJECT** | | **ARCHITECT** | |
| **LOCATION** | | **ENGINEER** | |
| **CONTRACTOR** | | **SUBMITTED BY** | **DATE** |

| FAN NUMBER | MODEL NUMBER | CFM | IN W.G. | RPM | WATTS | AMPS | SONES | QTY | OPTIONAL EQUIPMENT & REMARKS |
|---|---|---|---|---|---|---|---|---|---|
| | | | | | | | | | |

c UL us