::kitchensource.com
☎ 1.800.667.8721

NuTone®

SPECIFICATION SHEET

MODEL 791LEDNTM VENTILATION FAN WITH LED LIGHT

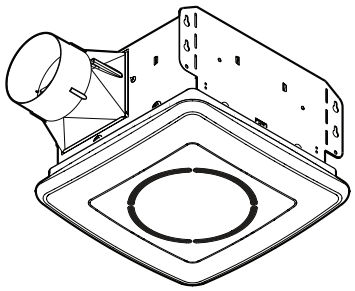

DESCRIPTION

BLOWER:

- Plug-in permanently lubricated motor
- Polymeric blower wheel
- Can be used to comply with ASHRAE 62.2, LEED, ENERGY STAR® for Homes and CA Title 24

HOUSING:

- Rugged, 25-gage galvanized steel construction
- Fits in 2" x 6" construction
- Pre-located mounting holes for quick, accurate installation
- Tapered, polymeric duct fitting with built-in backdraft damper for easy, positive duct connection and no metallic clatter

LIGHTING / GRILLE:

- Highly efficient, 12 Watt, integrated LED, dimmable
- LED lasts up to 25,000 hours
- Unique, low profile, perimeter-lit design for wide light pattern
- Even lens diffusion eliminates hotspots

TO OPERATE FAN AND LIGHT:

- Use only an ON/OFF or timer switch to operate the fan.
- Use only an ON/OFF switch, timer switch or relay-switch to operate the LED light.
- The LED light can be used with some dimmable switches (see below).
- Both the fan and LED light can be put on one switch.

DIMMING CONTROLS :

- May not be compatible with all dimmer controls
- Each application is unique and various factors such as load, common neutrals or other electrical products on the circuit can, in certain instances, cause variance in system performance.
- Dimmer model numbers vary slightly depending on color, packaging type, etc. such that variations of Model numbers may be suitable. Consult dimming system manufacturer for additional support in operation

* For a list of compatible controls, see nutone.com.

Acceptable for use over a tub or shower when connected to a GFCI (Ground Fault Circuit Interrupter) - protected branch circuit.

NOTE: For installation in flat ceilings only.

U.L. Listed for use in insulated ceilings (Type I.C.)

Use supply wiring rated for at least 90° C.

TYPICAL SPECIFICATION

Ventilation Fan with LED Light unit shall be NuTone Model 791LEDNTM.

Unit shall have galvanized steel housing with integral mounting holes. It shall be ducted to a roof or wall cap.

Blower assembly shall be removable and have a permanently lubricated motor.

Light fixture assembly shall be plug-in, removable and includes built-in LED lighting.

Air delivery to be no less than 100 cfm and sound level no greater than 1.5 sones. Air and sound ratings shall be certified by HVI.

Unit shall be U.L. Listed for use in insulated ceilings (Type I.C.)

JA8-2016

Broan-NuTone LLC

REFERENCE	QTY.	REMARKS	Project
			Location
			Architect
			Engineer
			Contractor
			Submitted by Date

::kitchensource.com
☎ 1.800.667.8721

PERFORMANCE RATINGS
MODEL 791LEDNTM VENTILATION FAN WITH LED LIGHT

HVI PERFORMANCE

Model	0.1 Ps - Static Pressure (in H2O)				0.25 Ps
	Airflow (CFM)	Sound (Sones)	Power (Watts)	Efficacy (CFM / W)	Airflow (CFM
791LEDNTM	110	1.5	23.4	4.71	92

HVI-2100 CERTIFIED RATINGS comply with new testing technologies and procedures prescribed by the Home Ventilating Institute, for off-the-shelf products, as they are available to consumers. Product performance is rated at 0.1 in. static pressure, based on tests conducted in a state-of-the-art test laboratory. Sones are a measure of humanly-perceived loudness, based on laboratory measurements.

AIR FLOW PERFORMANCE

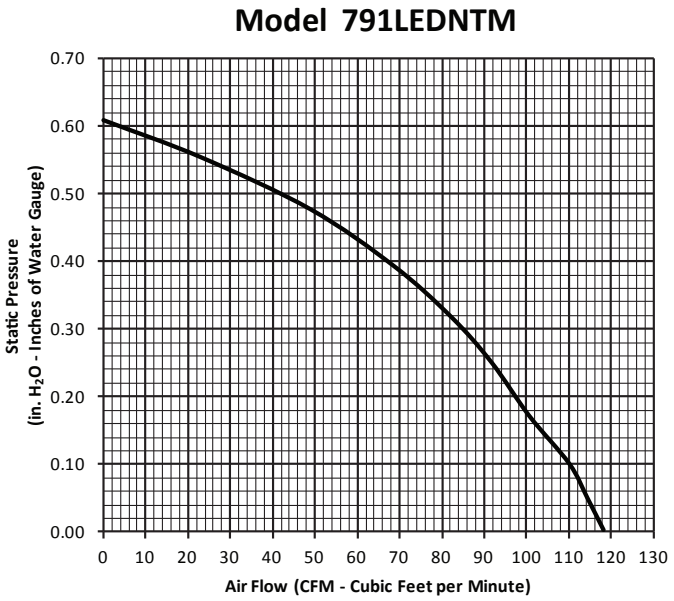

ELECTRICAL & WEIGHT

Model	Volts	Hz	Amps*	Shipping Weight
791LEDNTM	120	60	0.5	10.0

* Total connected load.

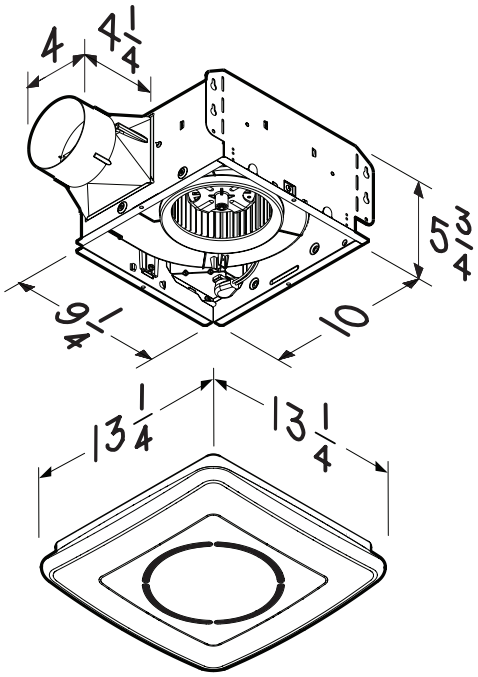

NuTone®