## CABINET INSTALLATION

**1** Drill holes and insert the dowels.

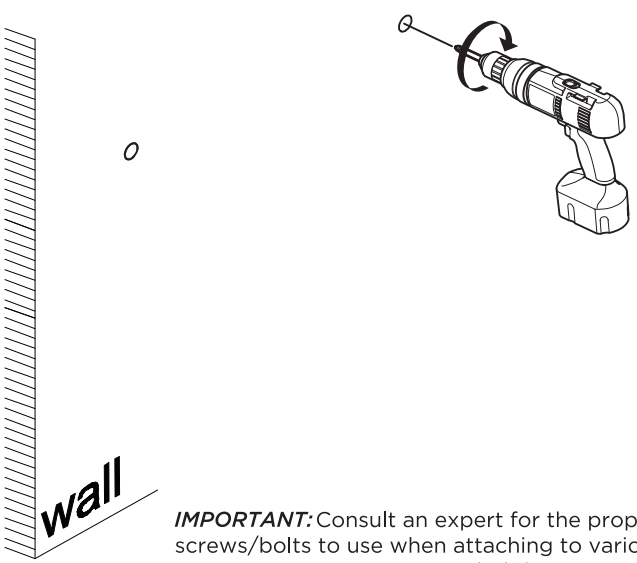


***IMPORTANT:*** Consult an expert for the proper screws/bolts to use when attaching to various constructions, Screws provided do not attach to all wall constrution types. Anchors are not required if brackets are installed in stud.

**2** Mark anchor mounting hole locations on wall as shown. Drill holes in the finished wall as required.

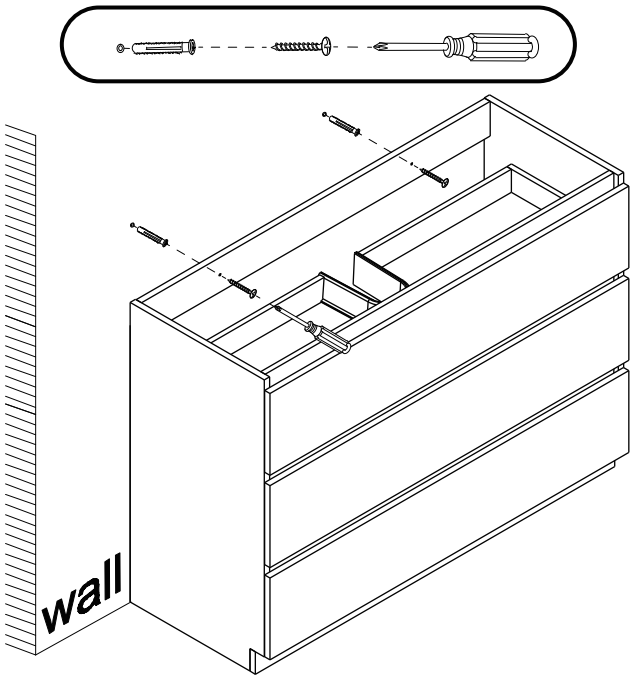


**3** Apply silicone and install sink.

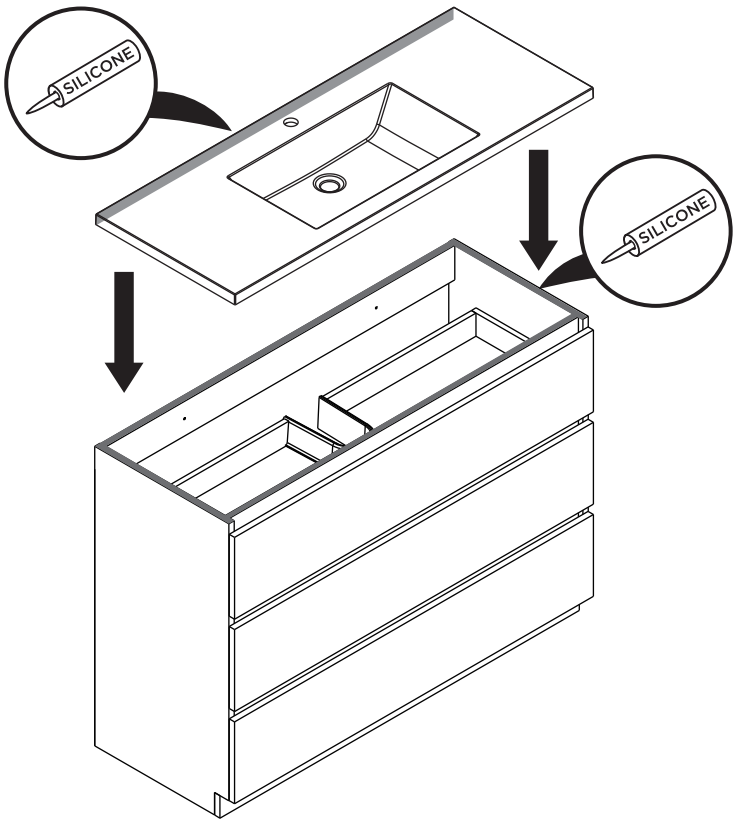




©2018 FRESCA™ All rights reserved. This material may not be reproduced, displayed, modified or distributed without the express prior written permission of the copyright holder.

# DRAWER REMOVAL & INSTALLATION

## REMOVAL

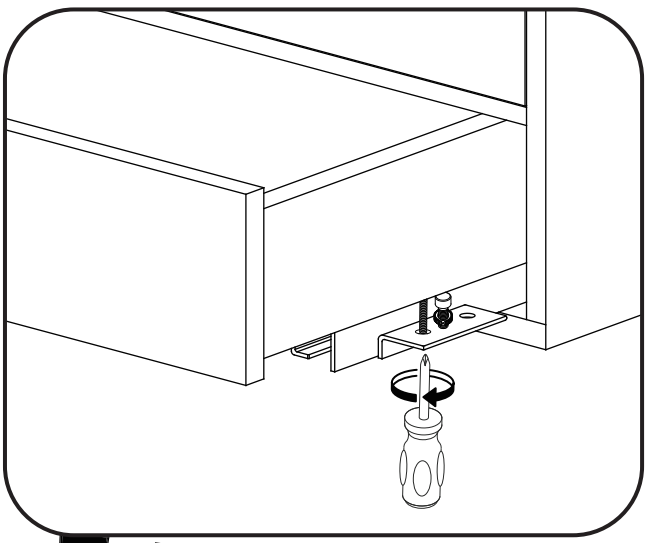

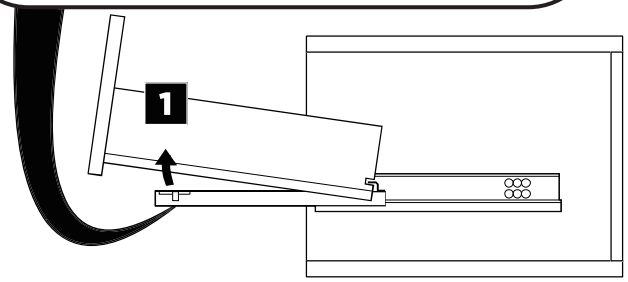


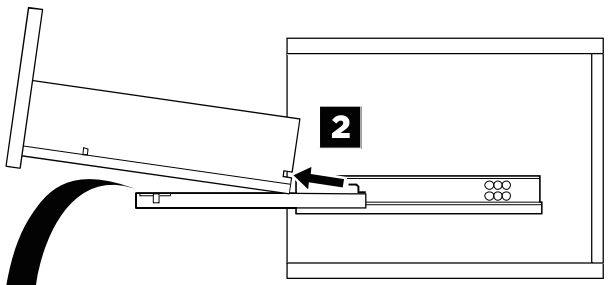


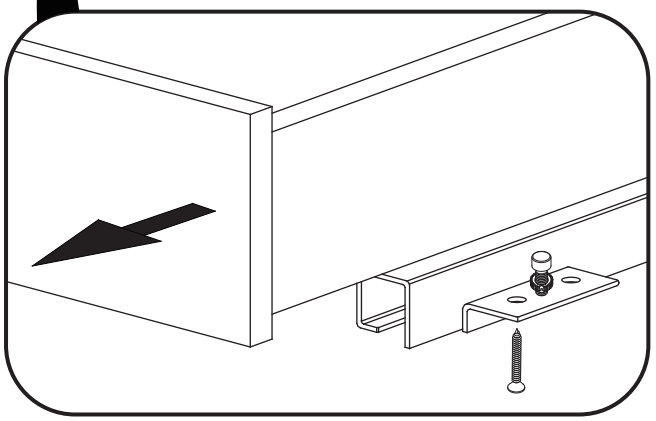

## INSTALLATION

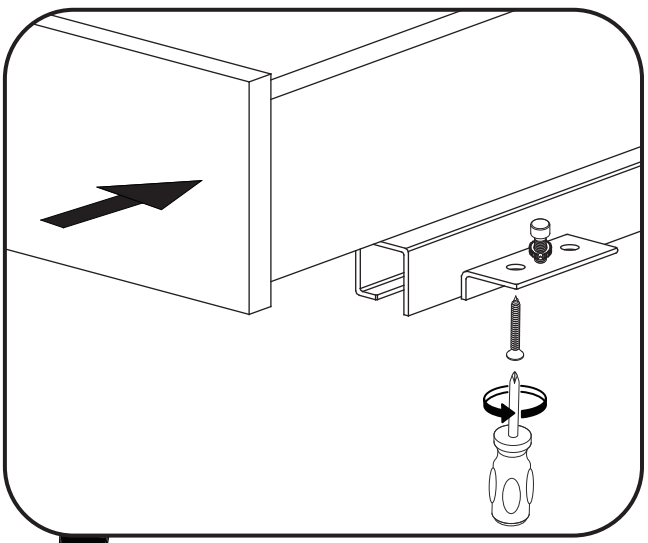

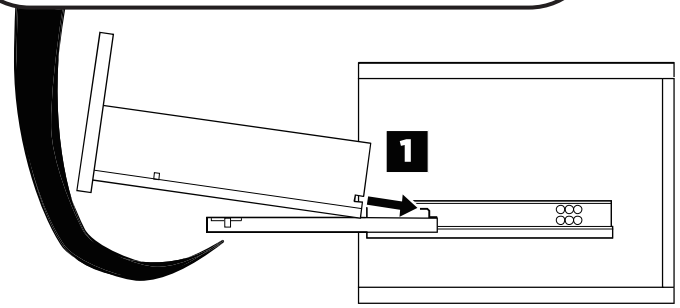


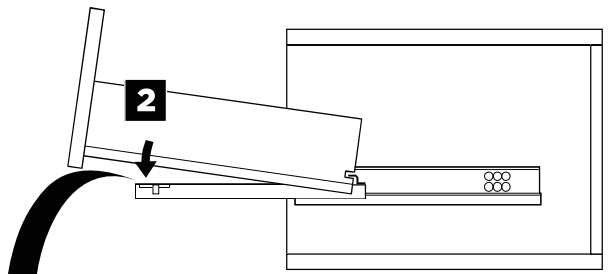


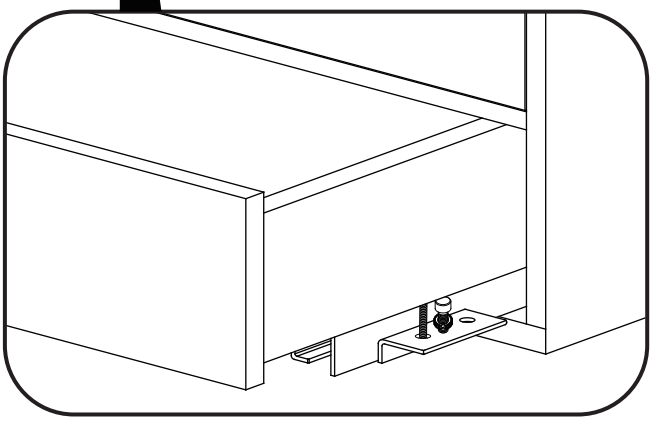



©2018 FRESCA™ All rights reserved. This material may not be reproduced, displayed, modified or distributed without the express prior written permission of the copyright holder.

## P-TRAP AND POP-UP INSTALLATION INSTRUCTIONS

**NOTE:**
Your item may appear slightly different from the illustration.

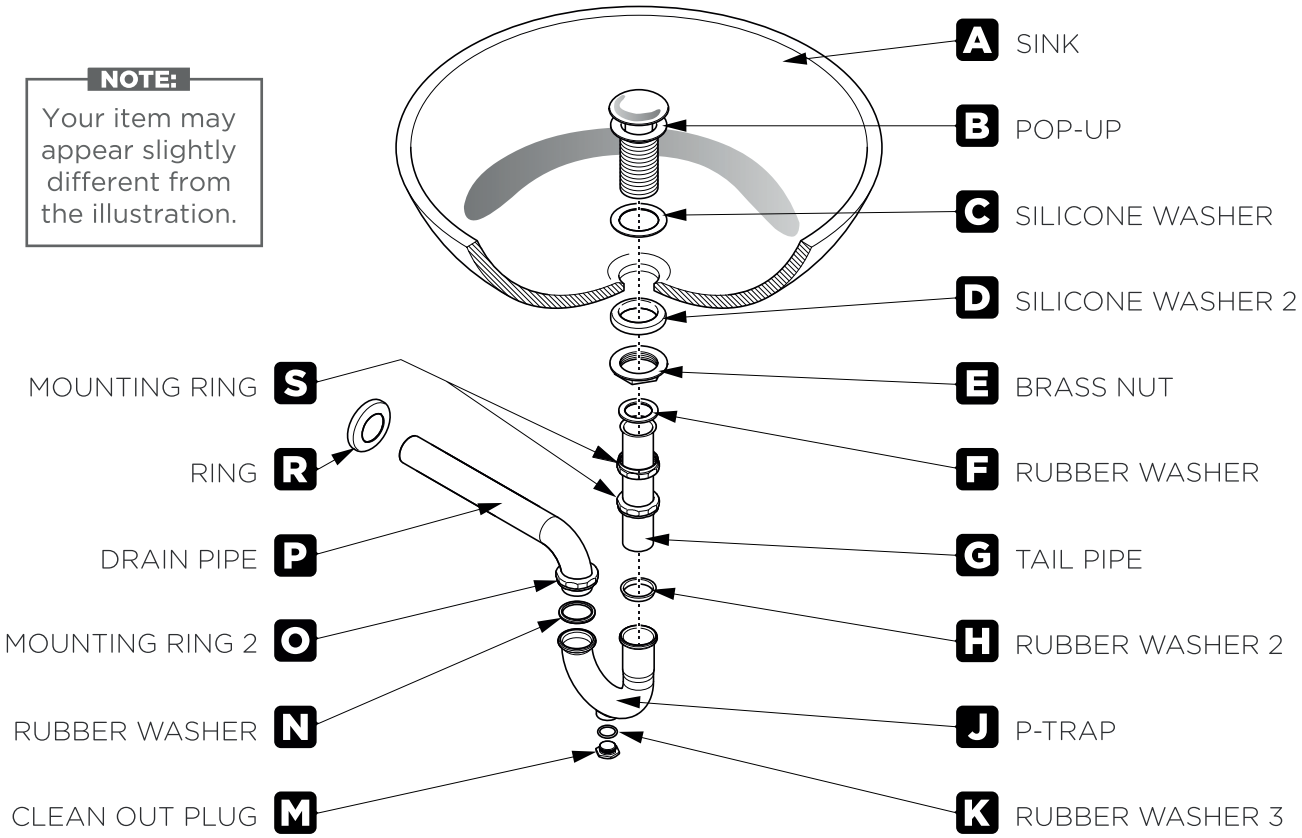


## POP-UP INSTALLATION INSTRUCTIONS

### FOR SINKS
WITHOUT OVERFLOW

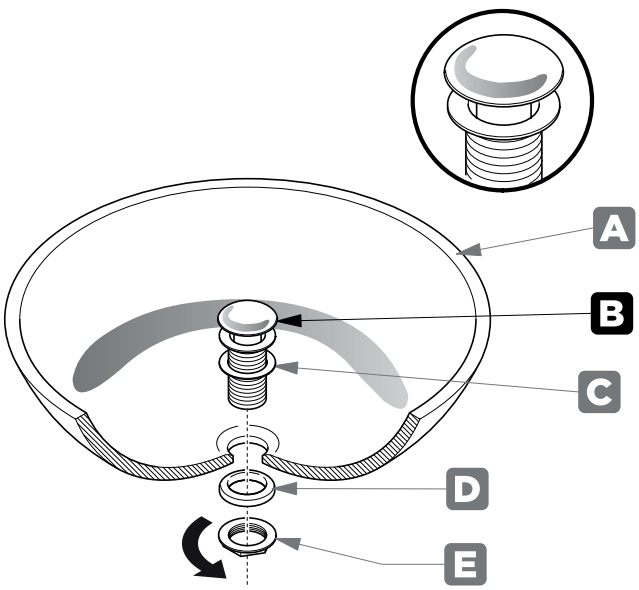


OR

### FOR SINKS
WITH OVERFLOW

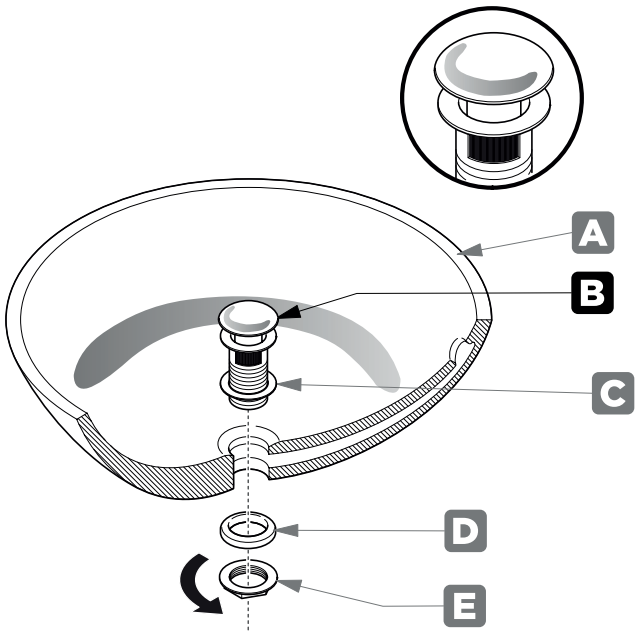




©2018 FRESCA™ All rights reserved. This material may not be reproduced, displayed, modified or distributed without the express prior written permission of the copyright holder.

## P-TRAP INSTALLATION

**1** Install tail pipe (G)

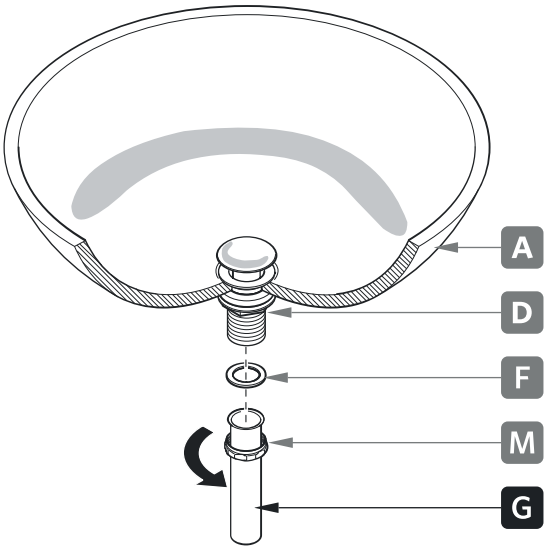


**2** Install p-trap (J)

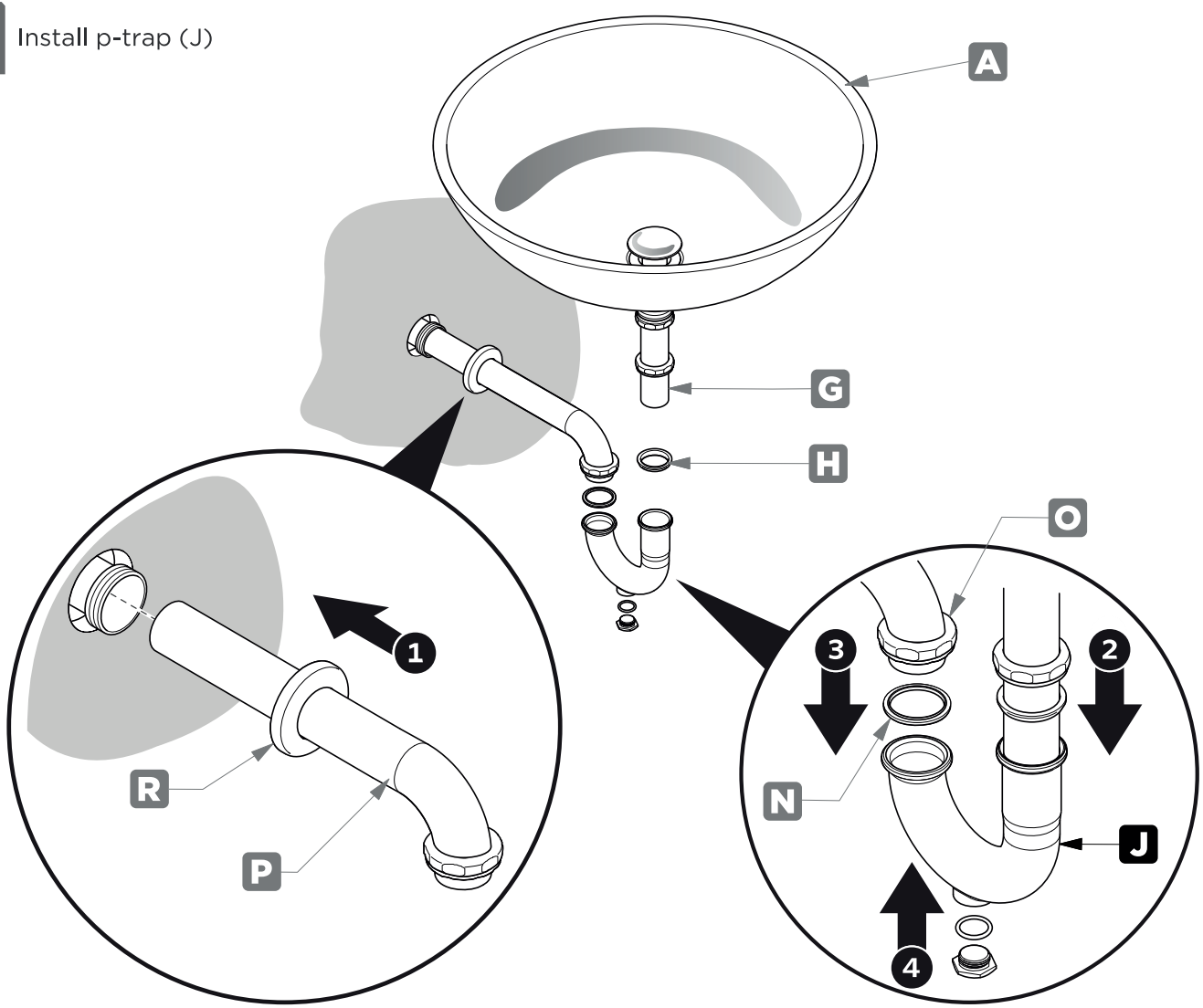




©2018 FRESCA™ All rights reserved. This material may not be reproduced, displayed, modified or distributed without the express prior written permission of the copyright holder.