INSTRUCTION MANUAL

SKU CODE:

DEC071C-G

FRONT

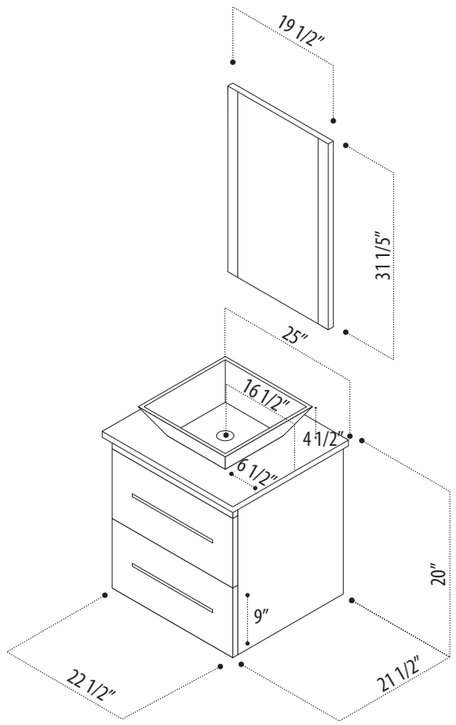

COLLECTION: Portland

DIMENSIONS: W 25" | D 22" | H 25"

BACK

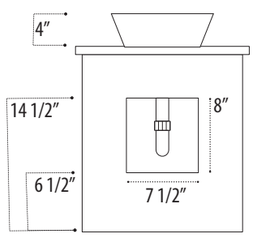

PACKING LIST

- Pre-assembled cabinet
- Countertop
- 1 Sink
- 1 Mirror
- Mirror mounting screws
- Cabinet mounting screws
- Instruction Manual

WARRANTY

Design Element warrants cabinets, mirrors, finishes and fittings to be free from defects in workmanship and materials under normal use and service for a period of one (1) year.
Please report any damage or missing pieces of your vanity to us immediately. These things must be reported no later than 30 days from the date of delivery.

Wall mounting the cabinet in the wall

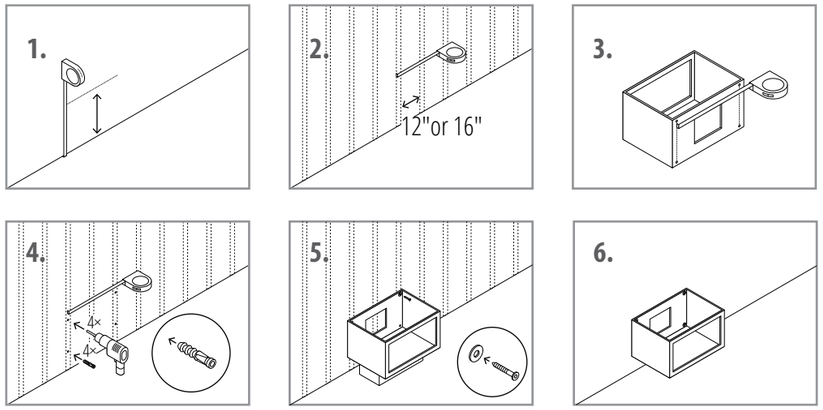

1. The recommended height of a wall mounted vanity is 32" to 34" inches above the ground. Measure a comfortable height according to your need and mark it on the wall.
2. Locate the studs on the wall. Studs are generally spaced 12"- 16" apart on the wall.
3. Measure the screw holes behind the vanity cabinet.
4. As per your chosen height, drill four holes inside the studs on the wall.
5. Place the cabinet against the wall, insert screws and tighten them to secure the cabinet. It is recommended that before positioning your cabinet with the wall, place a support beneath the cabinet so that it becomes easier to handle the weight.
6. After installation, confirm that the cabinet is firmly fitted so that it does not rock or move. Remove the support placed beneath after installation.

Attaching Counter Top To Cabinet

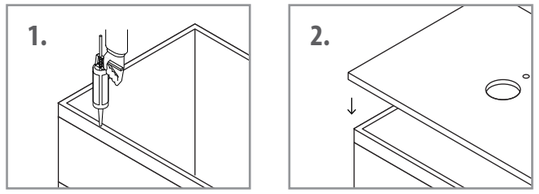

1. Apply continuous stream of quality silicon glue to the top of the cabinet where the countertop needs to be placed.
2. Place the countertop on the glued cabinet.

Attaching Sink To The Counter Top

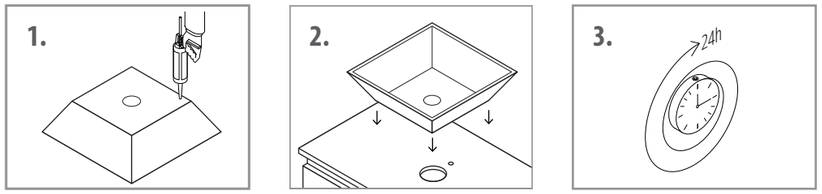

1. Add silicon glue to the back of the vessel sink.
2. Position and place the vessel sink in a way that the hole on the sink gets aligned with the cut out area on the countertop.
3. Don't start using the vanity right away. Wait for approximately 24 hours so that the silicon glue can dry.

Installing the drain

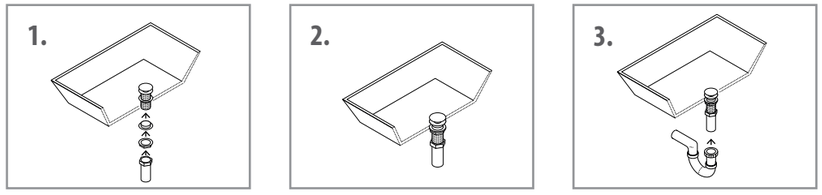

1. After installing the counter top on the cabinet, put the drain assembly inside the hole in the sink and fix it firmly.
2. Tie up the mounting rubbers and metal rings from the bottom of the drain.
3. Connect the trap onto the drain bottom.

Hanging Mirror On The Wall

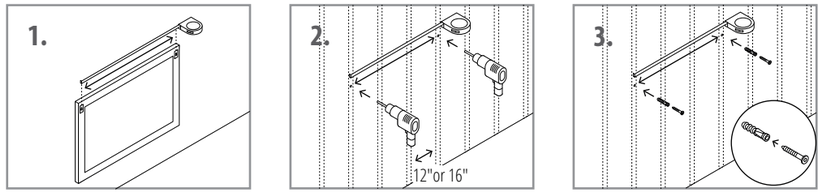

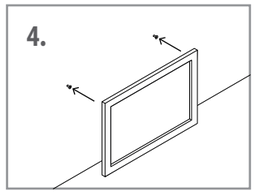

1. Measure the distance between the screw holes from the back of the mirror.
2. Locate the studs on the wall. They are normally placed 12" to 16" apart from each other. Drill two holes on the studs as per your previous measurement.
3. Insert the plastic plugs into the drilled holes and then insert screws into the plastic plugs. Tie up the screws till they remain at least 0.5" – 0.75" outside the wall.
4. Hang the mirror on to the screws.

SAFETY AND PRECAUTIONS

- Please go through this entire instruction manual before making any attempt to assemble, operate or install the product.
- During installation, handle countertop and sink with optimum care. It might break if hit hard on a solid surface.
- Don't start using the vanity right away. Wait for approximately 24 hours after installation so that the silicon glue can dry.
- When scrubbing the cabinet while cleaning, make sure you do not remove or scratch the finish.

CLEANING AND CARE

- Avoid using any type of rough cleaning material on top of the cabinet finish.
- Use mild liquid soap and water-dampened soft cloth to remove stains from the cabinet and to clean the countertop.
- For the glass part of the mirror, use ammonia-free cleaning products.

::kitchensource.com
☎ 1.800.667.8721