VINNOVA
FASHION BATHROOM LIFE

MODEL: 756036

- Please check your product packaging to make sure the included accessories are in the “list of standard accessories”. If any parts are missing, please contact your local dealer immediately.
- Do not allow any sharp objects to come in contact with the cabinet, as it will scratch the surface.
- Continuous and prolonged exposure to direct sunlight may cause discoloration to the wood.
- Do not put any hot appliances directly on or near the cabinet.
- Please avoid using cleaning products that contain bleach or ammonia.
- Wood surfaces should only be cleaned with wood care products such as soapy water or furniture polish.

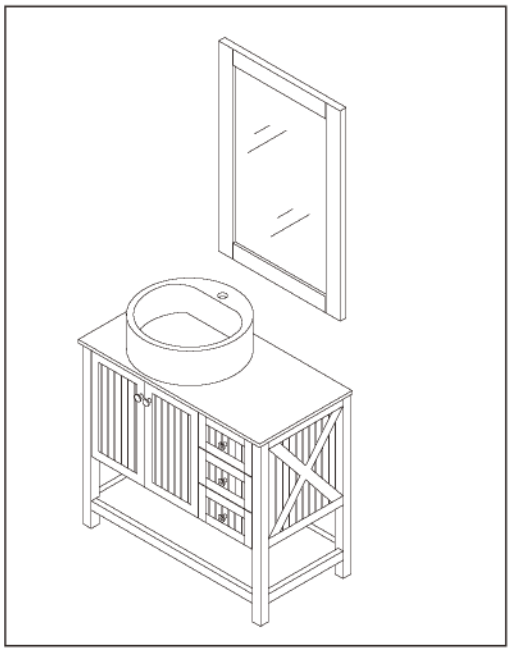

INSTALLATION

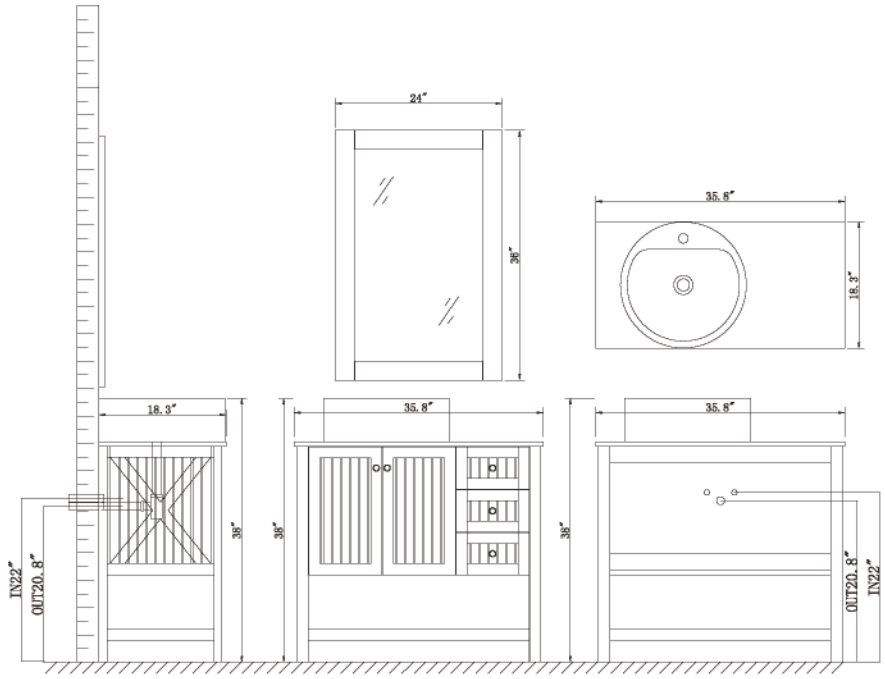

MAIN BODY PARTS

Ceramic basin/1

counter top/1

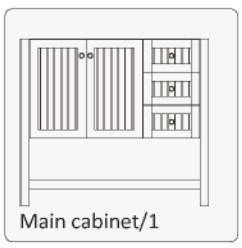
Main cabinet/1

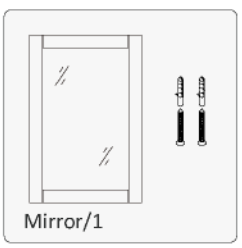
Mirror/1

INSTALLATION PARTS

Install screw/2

kitchensource.com
1.800.667.8721

ERECTING TOOL

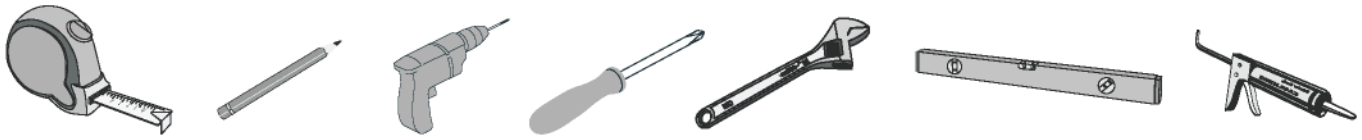

INSTALL, REMOVE, ADJUSTOF TOP FAST LOADING HINGE

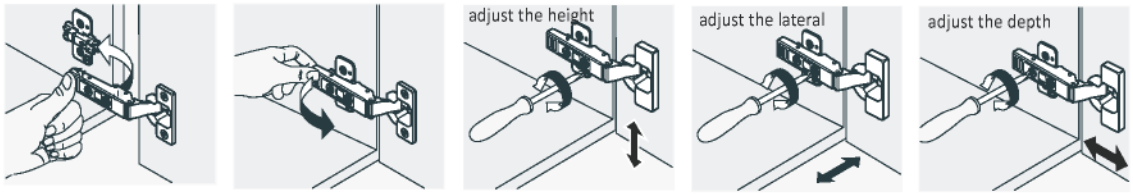

DRAWER'S ADJUST

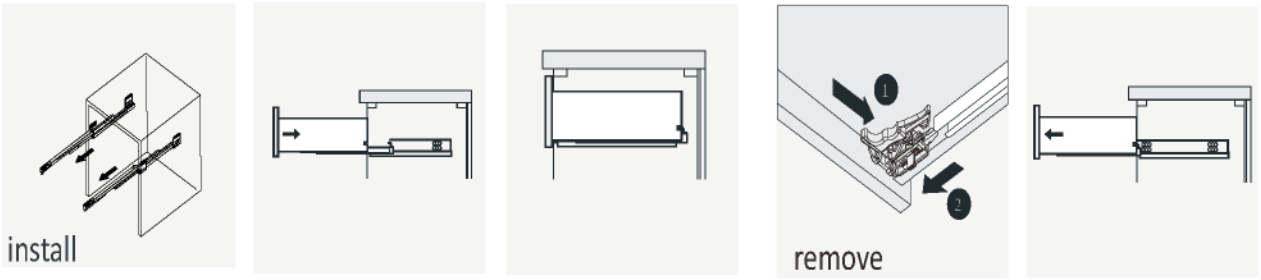

INSTALLATION INSTRUCTIONS

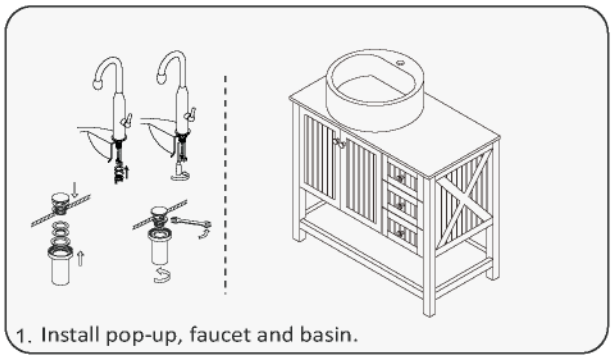
1. Install pop-up, faucet and basin.

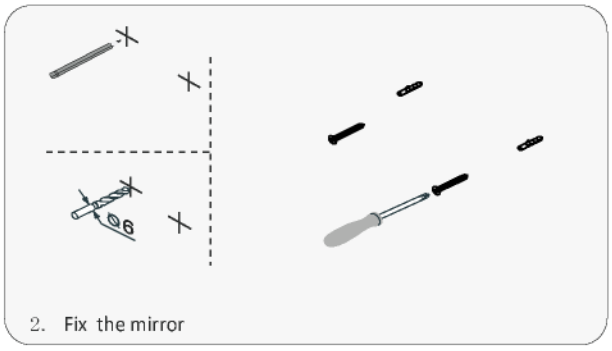

2. Fix the mirror

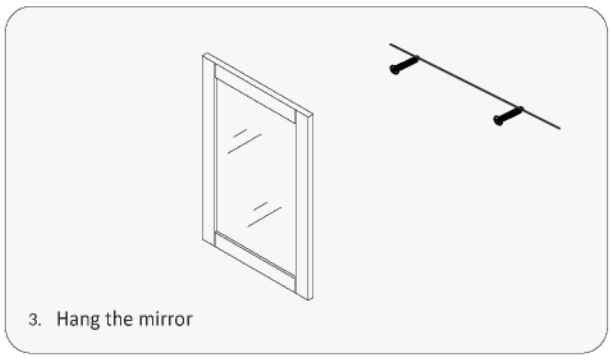
3. Hang the mirror

kitchensource.com
1.800.667.8721