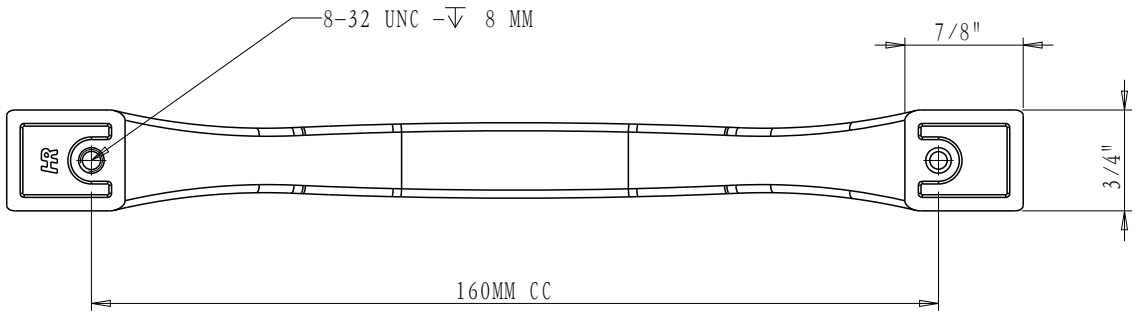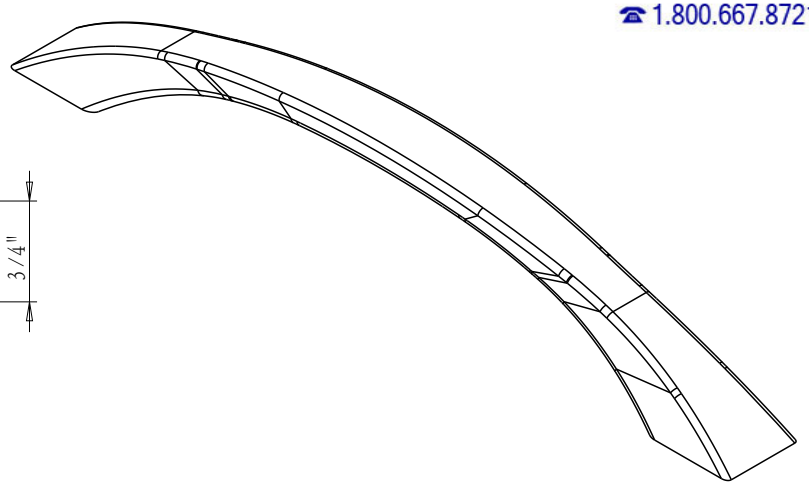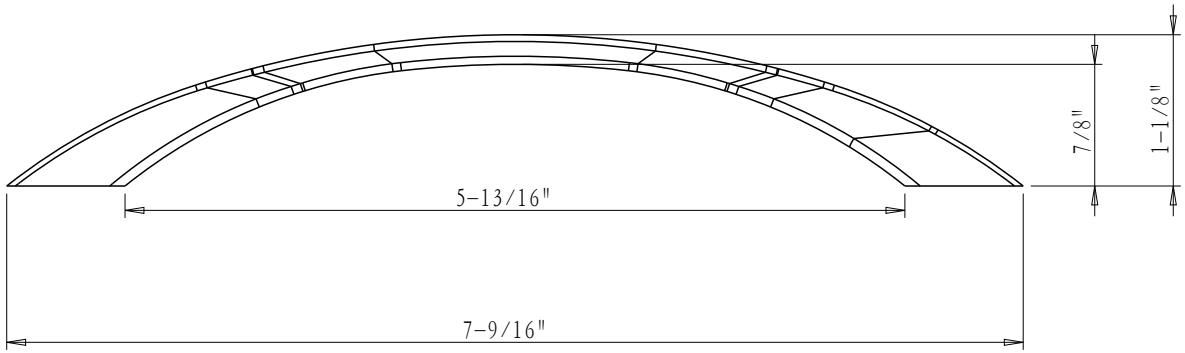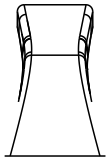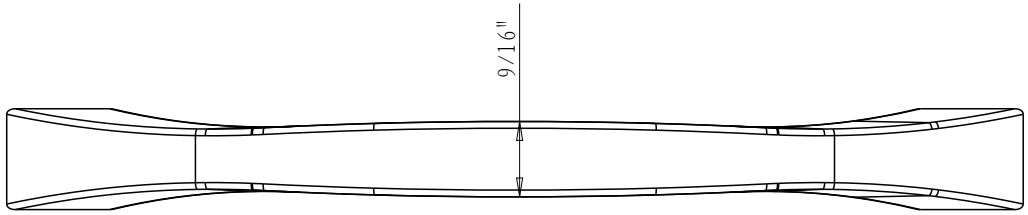::kitchensource.com
☎ 1.800.667.8721