LOX5

HÄFELE

Connect Mesh
6-way distributor

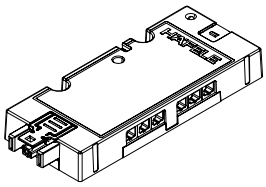

850.00.042
850.00.043

	12/24 V System	W	F	mm	T_A
12V	850.00.042	0 - 60 W	®	120,5 x 50,2 x 16	-25 °C - 45 °C
24V	850.00.043	0 - 120 W / UL: 90 W			-13 °F - 113 °F

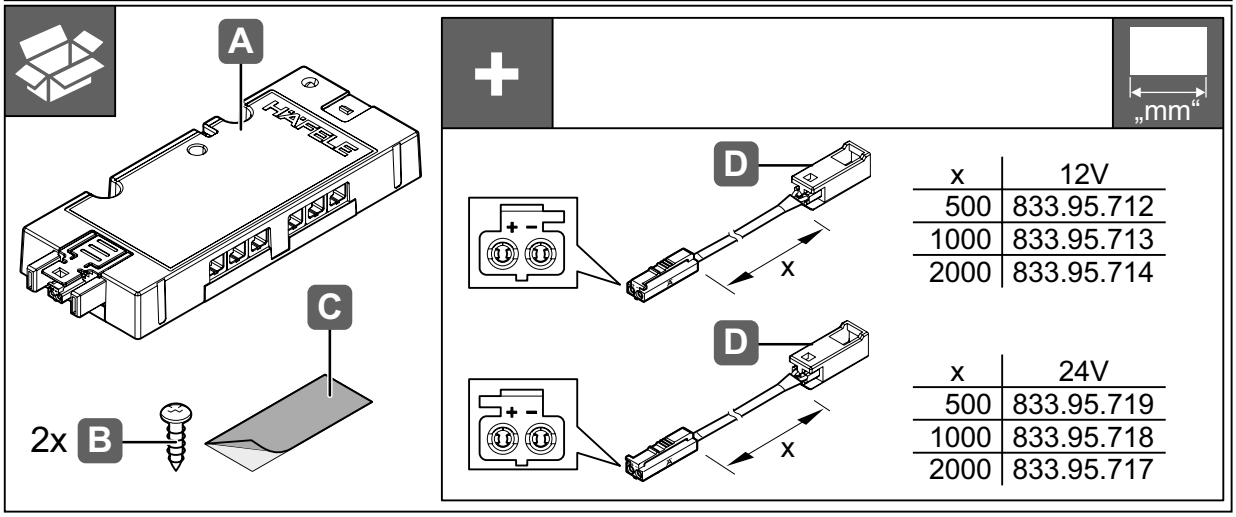

x	12V
500	833.95.712
1000	833.95.713
2000	833.95.714

x	24V
500	833.95.719
1000	833.95.718
2000	833.95.717

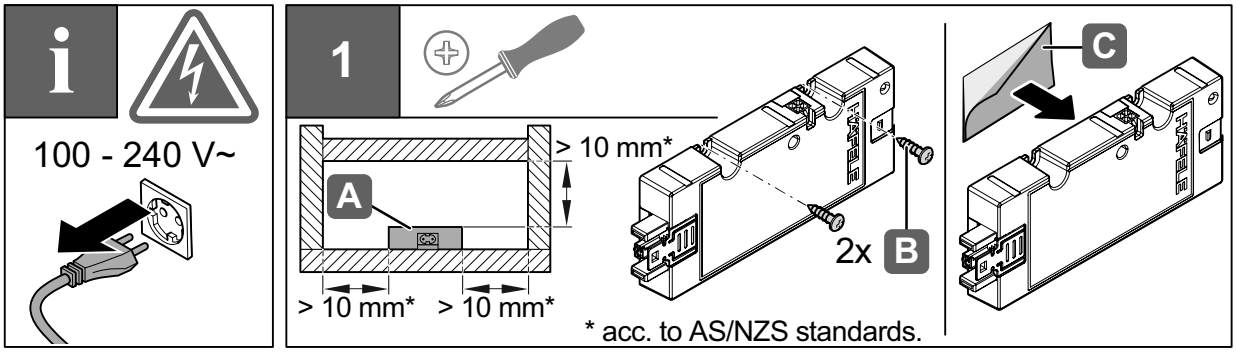

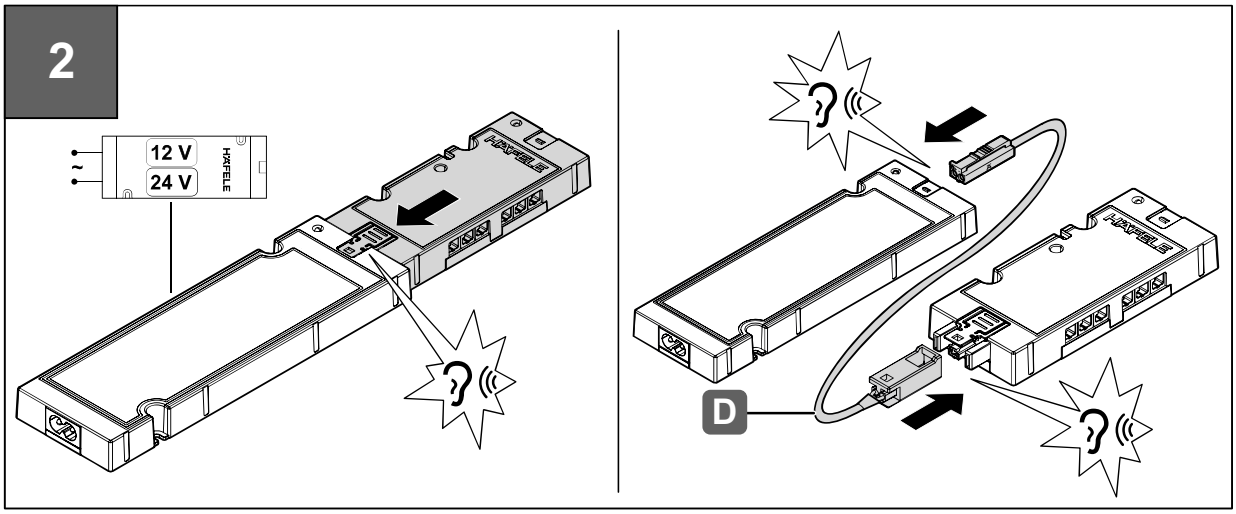

732.28.450

HDE 18.06.20

IP20

The Bluetooth® word mark and logos are registered trademarks owned by Bluetooth SIG, Inc. and any use of such marks by Häfele GmbH & Co KG is under license. Other trademarks and trade names are those of their respective owners.

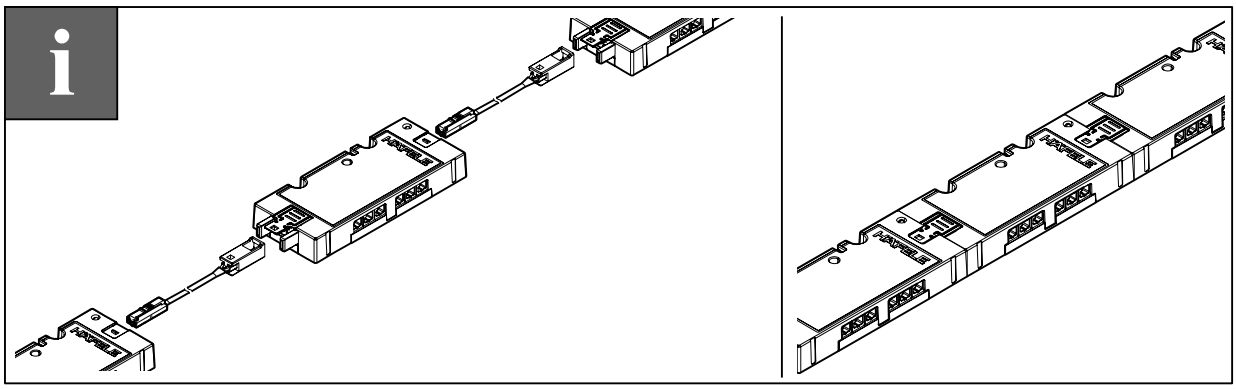

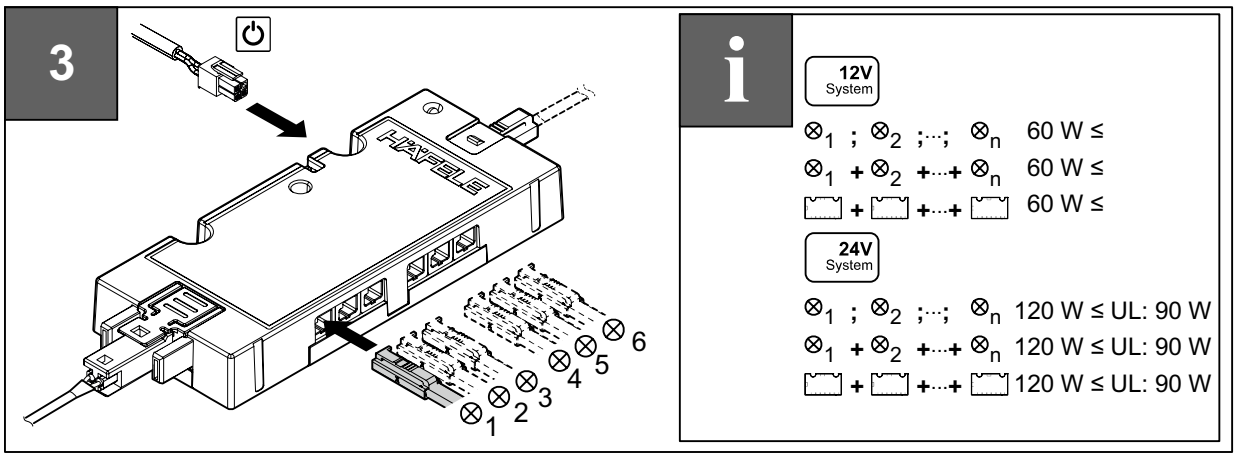

FCC

“Changes or modifications not expressly approved by the manufacturer could void the user’s authority to operate the equipment”. “This device complies with Part 15 of the FCC rules. Operation is subject to the following two conditions: (1) This device may not cause harmful interference, and (2) this device must accept any interference received, including interference that may cause undesired operation.”

IC

“This device complies with Industry Canada licence-exempt RSS standard(s). Operation is subject to the following two conditions: (1) This device may not interference, and (2) this device must accept any interference, including interference that may cause undesired operation of the device.”
“Le présent appareil est conforme aux CNR d‘Industrie Canada applicables aux appareils radio exempts de licence. L‘exploitation est autorisée aux deux conditions suivantes : (1) l‘appareil ne doit pas produire de brouillage, et (2) l‘utilisateur de l‘appareil doit accepter tout brouillage radioélectrique subi, même si le brouillage est susceptible d‘en compromettre le fonctionnement.”

DE

Hiermit erklärt die HÄFELE GmbH & Co KG, dass der Funkanlagentyp Connect Mesh 6-way distributor der Richtlinie 2014/53/EU entspricht. Der vollständige Text der EU Konformitätserklärung ist unter der folgenden Internetadresse verfügbar:

EN

Hereby, HÄFELE GmbH & Co KG declares that the radio equipment type Connect Mesh 6-way distributor is in compliance with Directive 2014/53/EU. The full text of the EU declaration of conformity is available at the following internet address:

732.28.450
HDE 18.06.20

::kitchensource.com
☎ 1.800.667.8721