kitchensource.com
1.800.667.8721

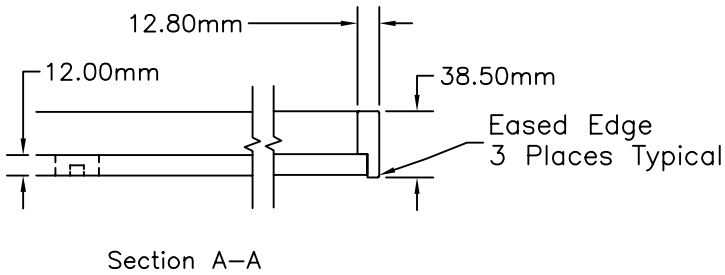

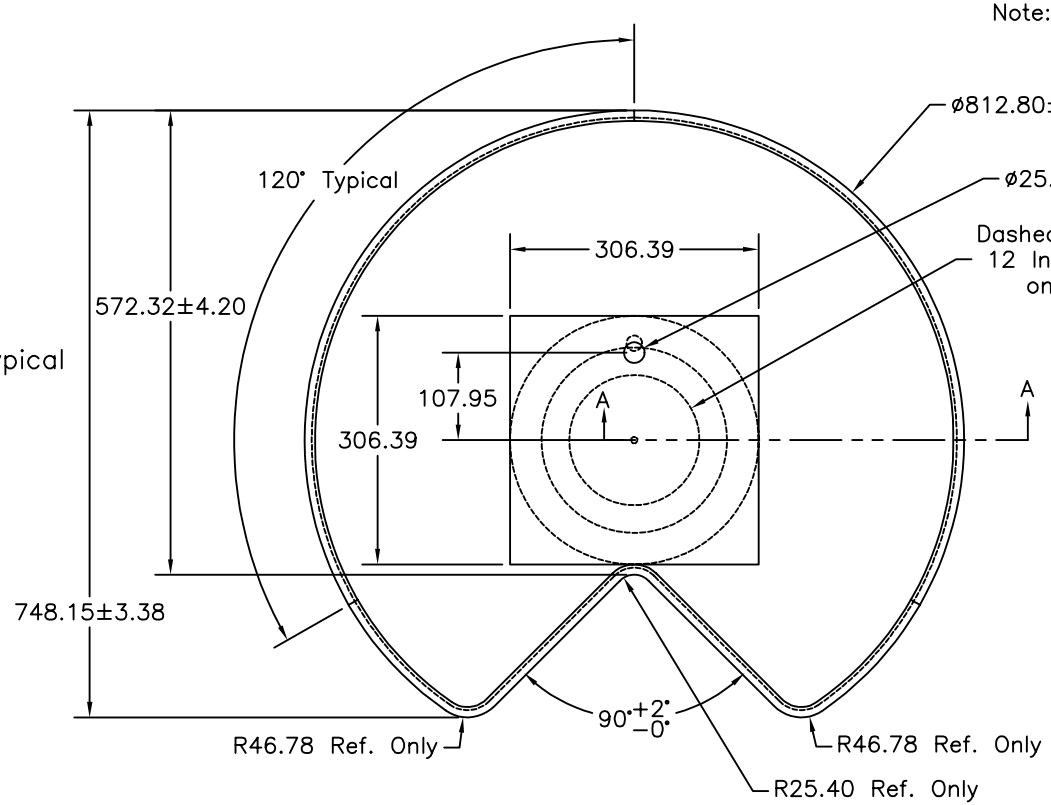

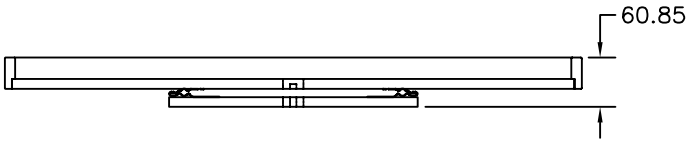

Material

Base: Plywood with "B Grade" Maple Veneer Face (0.06mm) and Veneer Back with no voids and pleasing appearance.

Rim: "B Grade" Maple Veneer Inside and Outside (0.06mm)/Rubber Wood Veneer Core 1mm ±.2mm Ply Thickness with no voids or visible knots or mineral.

Omega National PRODUCTS
1010 Rowe Street • Elkhart, Indiana, USA 46516-5589
Phone (574)295-5353 • Fax (574)295-5329
www.omeganationalproducts.com

THIS MATERIAL IS THE CONFIDENTIAL PROPERTY OF OMEGA NATIONAL PRODUCTS, LLC AND CONTAINS VALUABLE INFORMATION AND DATA THAT MAY NOT BE DUPLICATED, DISCLOSED OR GIVEN IN ANY FORM TO ANYONE WITHOUT PRIOR WRITTEN AUTHORIZATION FROM AN OFFICER OF THE COMPANY. THE INFORMATION AND DATA CONTAINED IN THIS MATERIAL COMPRISE TRADE SECRETS AND ARE PROTECTED UNDER FEDERAL AND STATE LAWS THAT PROVIDE FOR CIVIL AND CRIMINAL PENALTIES. IF YOU HAVE RECEIVED THIS MATERIAL UNINTENTIONALLY, PLEASE TREAT IT AS CONFIDENTIAL AND NOTIFY OMEGA NATIONAL PRODUCTS, LLC IMMEDIATELY BY CALLING 574–295–5353.

SCALE: None	MATERIAL: See Notes Above		TOL: ±1.60mm (Unless Noted)
	DRAWN: MLG	APPRVD:	DATE: 02/21/2006
	NOTES: Customer Specifications		
	DESC: 32" Plywood Kidney Shaped Turntable		PART#: T8332––––
	DWG: T8332	REV: D	PAGE: 02