SPECIFICATIONS

ADA SERIES

RANGE HOOD

270 CFM/4.0 Sones (Vertical) @ 0.10" S.P.
150 CFM/1.5 Sones (Vertical) @ 0.10" S.P., 42.7 Watts
270 CFM/3.5 Sones (Horizontal) @ 0.10" SP.
150 CFM/1.1 Sones (Horizontal) @ 0.10" SP., 42.4 Watts

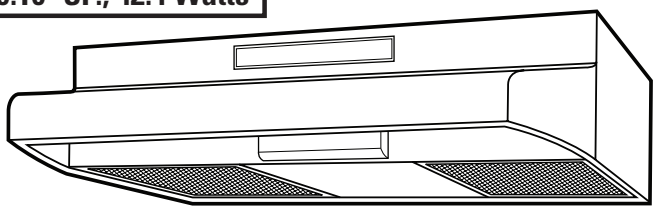

- **Dimensions**
  Overall bottom projection - 19½"
  Height -7½"
  Widths - 24", 30", 36"
- **Hood Body**
  Stainless Steel or 24 gauge cold rolled steel, auto welded, powder coated
- **Motor**
  2 speed, thermally protected, permanently lubricated motor. Rated 120 volts, 60 hz. with two electronically balanced blower wheels.
- **Controls**
  Wall mounted dual rocker switch with plate, white finish. Fits into a triple gang box.
- **Lighting**
  Includes 26 Watt GU24 Base self ballasted lamp (bulb included)
  4 watt night light (bulb not included)
- **Ducting Options**
  Horizontal ducting: 3¼"x10" (duct adapter and damper included)
  Vertical ducting: 3¼"x10" (duct adapter and damper included)
  Ductless*: removable front vent (charcoal filter not included)
- **Filters**
  Grease Filter: Dishwasher safe, GF-01 (included).
  Charcoal Filter: CF-01 (not included).
- **Available Finishes**
  Stainless Steel (ES248ADA, ES308ADA, ES368ADA)
  White (ES243ADA, ES303ADA, ES363ADA), Biscuit (ES244ADA, ES304ADA, ES364ADA),
  Almond (ES245ADA, ES305ADA, ES365ADA), Black (ES246ADA, ES306ADA, ES366ADA)

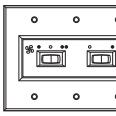

Included Wall Control

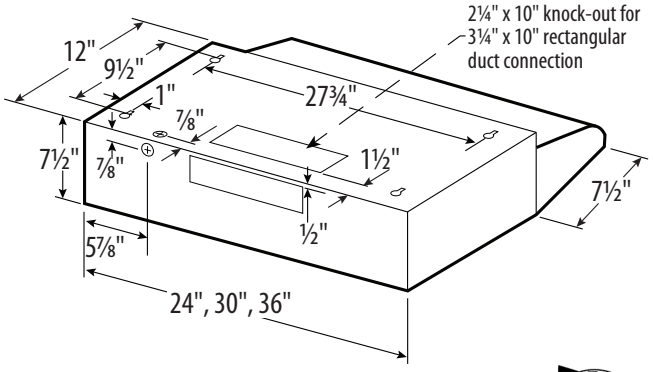

Compliant with ADA
(Americans with Dissabilities Act)

EXPANDED PERFORMANCE

Air Flow - CFM	Static Pressure (inches of w.g.) 0	0.1	0.125	0.15	0.2	0.25	Sones @ .1 SP	Fan Speed RPM	Power Watts	Amps
Horz Ducting High Speed	311	270	261	251	225	188	3.5	1653	73.0	1.0
Horz Ducting Low Speed	163	150	144	137	66	-	1.1	1229	42.4	1.0
Vert Ducting High Speed	310	270	261	251	225	192	4.0	1653	73.0	1.0
Vert Ducting Low Speed	159	150	148	142	114	44	1.5	1189	42.7	1.0

Intertek

ENERGY STAR

* The ENERGY STAR Program for Residential Ventilating Fans has no provision for qualification of ductless rangehoods (recirculating not ventilating), as a result the ENERGY STAR program applies to ducted rangehoods only. Specifications subject to change without notice.

Updated 5-11

kitchensource.com
1.800.667.8721