::kitchensource.com
☎ 1.800.667.8721

BROAN® Elite

RANGE HOOD

Series: EQLD1

INSTALLATION, USE AND CARE MANUAL

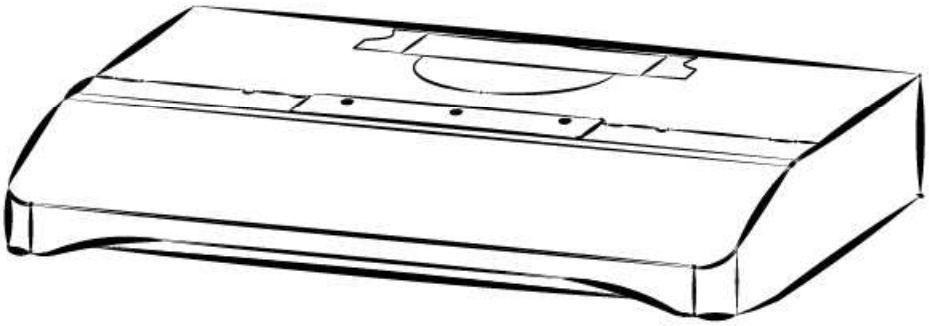

Serial number: _____

99045657-007B

::kitchensource.com
☎ 1.800.667.8721

BROAN® Elite

TABLE OF CONTENTS

Safety 3-4

Operation 5-6

Cleaning and Maintenance 7

Motors
Grease Filters
Non-Ducted Recirculation Filters
Fan Wheels
Stainless Steel Cleaning

Installation 8-21

Recommended Tools
and Accessories for Installation 8
Install Ductwork (Ducted Installations Only) . . . 8
Contents 9
Prepare the Hood 10-13
Prepare the Hood Location 14
EZ1 One-Person Installation 14-16
Install the Hood (EZ1 Brackets) 17-18
Standard Installation 19
Install the Hood (Standard Installation) 20
Connect the Wiring 21

Wiring Diagram 22

Service Parts 23

Warranty 24

::kitchensource.com
☎ 1.800.667.8721

READ AND SAVE THESE INSTRUCTIONS

⚠ Intended for domestic cooking only ⚠

⚠ WARNING

TO REDUCE THE RISK OF FIRE, ELECTRIC SHOCK, OR INJURY TO PERSONS, OBSERVE THE FOLLOWING:

- Use this unit only in the manner intended by the manufacturer. If you have questions, contact the manufacturer at the address or telephone number listed in the warranty.
- Before servicing or cleaning unit, switch power off at service panel and lock the service disconnecting means to prevent power from being switched on accidentally. When the service disconnecting means cannot be locked, securely fasten a prominent warning device, such as a tag, to the service panel.
- Installation work and electrical wiring must be done by a qualified person(s) in accordance with all applicable codes and standards, including fire-rated construction.
- Sufficient air is needed for proper combustion and exhausting of gases through the flue (chimney) of fuel burning equipment to prevent backdrafting. Follow the heating equipment manufacturer's guidelines and safety standards such as those published by the National Fire Protection Association (NFPA) and the American Society for Heating, Refrigeration and Air Conditioning Engineers (ASHRAE) and the local code authorities.
- When cutting or drilling into wall or ceiling, do not damage electrical wiring and other hidden utilities.
- Ducted fans must always be vented to the outdoors.
- Do not use this unit with any additional solid-state speed control device.
- To reduce the risk of fire, use only metal ductwork.
- This unit must be grounded.
- As an alternative, this product may be installed with the UL-approved cord kit designated for the product, following instructions packed with the cord kit.
- When applicable local regulations comprise more restrictive installation and/or certification requirements, the aforementioned requirements prevail on those of this document and the installer agrees to conform to these at his own expense.

::kitchensource.com
☎ 1.800.667.8721

⚠ WARNING

TO REDUCE THE RISK OF A RANGE TOP GREASE FIRE:

a) Never leave surface units unattended at high settings. Boilovers cause smoking and greasy spillovers that may ignite. Heat oils slowly on low or medium settings.

b) Always turn hood ON when cooking at high heat or when flambeing food (i.e.: Crêpes Suzette, Cherries Jubilee, Peppercorn Beef Flambé).

c) Clean ventilating fan frequently. Grease should not be allowed to accumulate on fan, filters or in exhaust ducts.

d) Use proper pan size. Always use cookware appropriate for the size of the surface element.

TO REDUCE THE RISK OF INJURY TO PERSONS IN THE EVENT OF A RANGE TOP GREASE FIRE, OBSERVE THE FOLLOWING*:

1. SMOTHER FLAMES with a close-fitting lid, cookie sheet or metal tray, then turn off the burner. BE CAREFUL TO PREVENT BURNS. IF THE FLAMES DO NOT GO OUT IMMEDIATELY, EVACUATE AND CALL THE FIRE DEPARTMENT.
2. NEVER PICK UP A FLAMING PAN — You may be burned.
3. DO NOT USE WATER, including wet dishcloths or towels — This could cause a violent steam explosion.
4. Use an extinguisher ONLY if:
   A. You own a Class ABC extinguisher and you know how to operate it.
   B. The fire is small and contained in the area where it started.
   C. The fire department has been called.
   D. You can fight the fire with your back to an exit.

* Based on "Kitchen Fire Safety Tips" published by NFPA.

⚠ CAUTION

- For indoor use only.
- For general ventilating use only. Do not use to exhaust hazardous or explosive materials and vapors.
- To avoid motor bearing damage and noisy and/or unbalanced fan blade, keep drywall spray, construction dust, etc. off range hood.
- Your hood motor has a thermal overload which will automatically shut off the motor if it becomes overheated. The motor will restart when it cools down. If the motor continues to shut off and restart, have the hood serviced.
- For best capture of cooking fumes, the bottom of the hood MUST NOT BE LESS than 24" and at a maximum of 30" above the cooking surface.
- Always follow the cooking equipment manufacturer's requirements regarding the ventilation needs.
- To reduce the risk of fire and to properly exhaust air, be sure to duct air outside — Do not exhaust air into spaces within walls or ceiling or into attics, crawl space or garage.
- When installing, servicing or cleaning the unit, it is recommended to wear safety glasses and gloves.
- Please read specification label on product for further information and requirements.

::kitchensource.com
☎ 1.800.667.8721

Operation

Always turn your hood on before you begin cooking to establish an air flow in the kitchen.

Let the blower run for a few minutes to clear the air after you turn off the range. This will help keep the whole kitchen cleaner and fresher.

This hood is equipped with infrared sensing controls. To activate it, simply touch the sensor corresponding to the desired function and/or intensity. At the touch of the sensor, a beep is emitted to acknowledge the command.

MASTER ON/OFF

Touch this sensor to turn ON the lights and blower at the last saved blower and/or lighting level. When the blower and/or lights are ON, touching this sensor will store the last-used blower speed and light intensity and turn the unit off.

BLOWER

ACTIVATION/SPEED CHANGE

When blower is OFF, touch the sensor corresponding to the desired blower speed. The sensor will illuminate and the blower will activate.

When the blower is ON, touch the sensor corresponding to the active blower speed to turn the blower OFF and memorize the blower speed.

NOTE: When LOW speed is activated from OFF, the blower starts on MEDIUM speed for a very short moment, and then resumes to LOW speed.

DELAY OFF

To activate the Delay OFF function, while the blower is ON, touch and hold for 3 seconds the illuminated sensor corresponding to the active blower speed. A beep will be emitted at the first touch, and again at the end of the 3-second hold. The blower will continue to operate for 10 minutes at this setting. During this time, the sensor corresponding to the active blower speed will blink to indicate that the Delay OFF function was activated.

When the Delay OFF function is activated, the blower speed can be changed by touching the sensor corresponding to the desired blower speed without affecting the remaining time of the delay.

To cancel the Delay OFF function before the end of the 10-minute cycle, touch and hold for 3 seconds the sensor corresponding to the active blower speed, or simply touch the Master ON/OFF sensor.

HEAT SENTRY™

This hood is equipped with a protective device that changes the blower speed when an abnormally high heat level is detected while the blower is activated. When the Heat Sentry is activated, it sets the blower on MEDIUM speed while all the blower sensors blink. The lighting can still be controlled, but the blower will remain on MEDIUM speed until the heat level is normal. The blower will then return to the speed previously selected.

NOTE: When excessive heat is detected, Heat Sentry will shut off both the blower and lights while all the blower sensors will blink faster. Both the blowers and lights will remain OFF until the temperature cools down; the blower will then start on MEDIUM speed and the lights can be controlled again. The blower will remain on MEDIUM speed until the heat level is normal. The blower will then return to the speed previously selected.

::kitchensource.com
☎ 1.800.667.8721

LIGHTING/LIGHT INTENSITY CHANGE

To turn the lighting ON, touch the sensor corresponding to the desired lighting intensity and the sensor will illuminate.

When the lighting is ON, touch the sensor corresponding to the active light intensity to turn the lighting OFF and memorize the intensity.

The LED modules included with this hood are the latest in LED cooktop illumination technology specially designed to operate in the elevated temperatures of cooking - offering bright lighting and lasting up to 25 times as long as a standard bulb and greater reliability than typical replacement LED bulbs.

FILTER CLEANING REMINDER

When it is time to clean the filters, the Filter Cleaning Reminder sensor will blink for 30 seconds after the blower is turned off.

To reset the Filter Cleaning Reminder, touch and hold for 3 seconds this sensor while it is blinking.

ADDITIONAL INFORMATION

This control is light-sensitive; pointing directional spot lights towards it may cause it to malfunction. In rare circumstances, the control could falsely be activated by an external light source.

OPTIONAL REMOTE CONTROL

For more convenience, this range hood can also be controlled using the HCR3 remote control (purchase separately). For more details, see instructions included with the HCR3 remote control.

::kitchensource.com
☎ 1.800.667.8721

Cleaning and Maintenance

Proper maintenance of the Range Hood will assure proper performance of the unit.

MOTORS

The motors are permanently lubricated and never need oiling. If the motor bearings make excessive or unusual noise, replace the motor with the exact service motor. The fan wheel should also be replaced.

GREASE FILTERS

The grease filters should be cleaned frequently. Use a warm dishwashing detergent solution. Grease filters are diswasher safe. Clean all-metal filters in the dishwasher using a non-phosphate detergent. Discoloration of the filters may occur if using phosphate detergents, or as a result of local water conditions - but this will not affect filter performance. This discoloration is not covered by the warranty. To minimize or prevent discoloration, hand wash filters using a mild detergent.

NON-DUCTED RECIRCULATION FILTERS

The non-ducted recirculation filters should be changed every 3 to 6 months. Replace more often if your cooking style generates extra grease, such as frying and wok cooking. Refer to installation instructions included with non-ducted recirculation filters.

FAN WHEELS

The center of the fan wheels should be cleaned frequently. Use a clean cloth soaked with warm detergent solution.

STAINLESS STEEL CLEANING

Do:

- Regularly wash with clean cloth or rag soaked with warm water and mild soap or liquid dish detergent.
- Always clean in the direction of original polish lines.
- Always rinse well with clear water (2 or 3 times) after cleaning. Wipe dry completely.
- You may also use a specialized household stainless steel cleaner.

Don't:

- Use any steel or stainless steel wool or any other scrapers to remove stubborn dirt.
- Use any harsh or abrasive cleansers.
- Allow dirt to accumulate.
- Let plaster dust or any other construction residues reach the hood. During construction/ renovation, cover the range hood to make sure no dust sticks to the stainless steel surface.

Avoid when choosing a detergent:

- Any cleaners that contain **bleach** will attack stainless steel.
- Any products containing: **chloride, fluoride, iodide, bromide** will deteriorate surfaces rapidly.
- Any combustible products used for cleaning such as **acetone, alcohol, ether, benzol**, etc., are highly explosive and should never be used close to a range.

::kitchensource.com
☎ 1.800.667.8721

For ADA compliance installation guidelines, please visit www.broan-nutone.com

Recommended Tools and Accessories for Installation

- Measuring tape
- Phillips screwdriver no. 2
- Nutdriver or socket 11/32"
- Flat blade screwdriver (to open knockout holes)
- Drill, 1/8" drill bit and 1½" hole saw (to mark holes for ducting and cut electrical access hole)
- 7/64" drill bit (to drill holes for EZ1 brackets mounting screws)
- Wood shims (2) and wood screws (4) (required for standard installation to framed cabinet)
- Saw (to cut holes for ducted application)
- Sheet metal shears (ducted installation only, for duct adjustment)
- Pliers (ducted installation only, for duct adjustment)
- Metal foil duct tape (for ducted applications)
- Scissors (to cut metal foil duct tape)
- Pencil
- Wire stripper
- Strain relief, 1/2" diameter (to secure house wiring cable to the hood)

Install Ductwork (Ducted Installations Only)

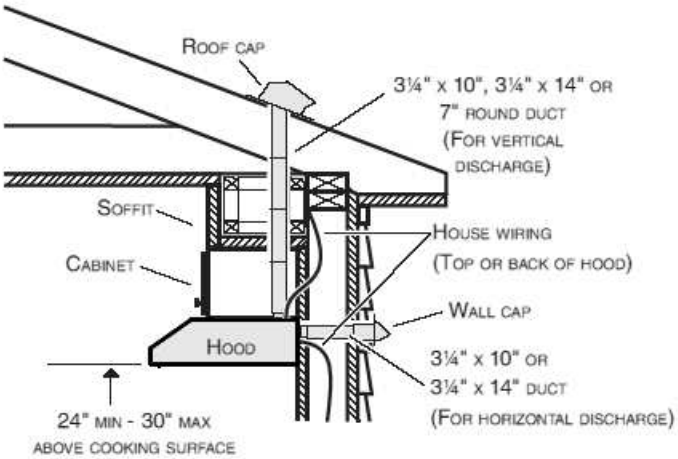

NOTE: Distances over 30" are at the installer and user discretion.

1] Determine whether hood will discharge vertically (3¼" x 10", 3¼" x 14" or 7" round), or horizontally (3¼" x 10" or 3¼" x 14" only).

2] Decide where the ductwork will run between the hood and the outdoors.

3] Choose a straight, short duct run to allow the hood to perform most efficiently. Long duct runs, elbows and transitions will reduce the performance of the hood. Use as few of them as possible. When possible, use at least 2 foot straight runs before any turns. Larger ductwork may be required for best performance with longer duct runs.

4] Install wall cap or roof cap (sold separately); ensure there is no leak in house insulation. Connect metal ductwork to cap and work back towards the hood location. Use 2" metal foil duct tape to seal the joints between ductwork sections.