::kitchensource.com
☎ 1.800.667.8721

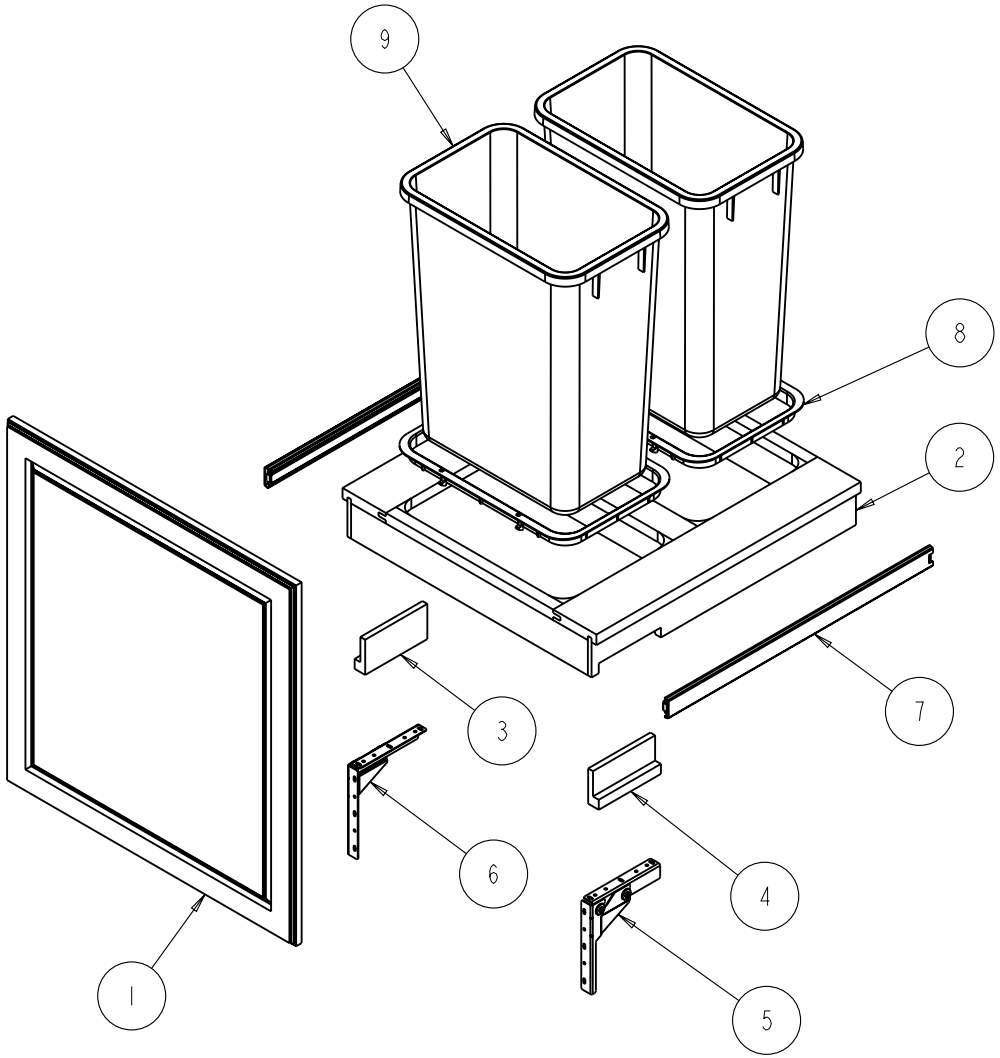

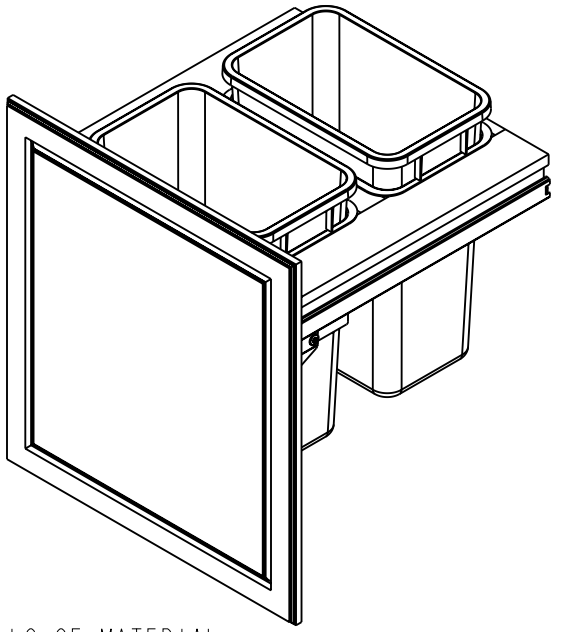

BILLS OF MATERIAL:

NO.	ITEM#	MATERIAL	QTY	UNIT WEIGHT	TOTLE WEIGHT	TYPE	ASSY LEVEL
9	CAN-35		2			PART	1
8	TOP-MOUNT-RING		2	74.80	149.60	PART	1
7	303FUSFT22		2			PART	1
6	CAN-TMBRKT-L		1			ASSEMBLY	1
5	CAN-TMBRKT-R		1			ASSEMBLY	1
4	MOUNT-BOARD-R		1			PART	1
3	MOUNT-BOARD-L		1			PART	1
2	FRAME-21		1			ASSEMBLY	1
1	DOOR-21		1			PART	1

hardware resources

ITEM#: CAN-TMDSC-21

FINISH:

MATERIAL:

WEIGHT: 9

PROJECTION

PROPRIETARY AND CONFIDENTIAL

THE INFORMATION CONTAINED IN THIS DRAWING IS THE SOLE PROPERTY OF HARDWARE RESOURCES INC. ANY REPRODUCTION IN PART OR AS A WHOLE WITHOUT THE WRITTEN PERMISSION OF HARDWARE RESOURCES INC. IS PROHIBITED.

TOLERANCE UNLESS OTHERWISE SPECIFIED:
X ±0.20
X.X ±0.10
X.XX ±0.05
ANGULAR: ±0.5°
DO NOT SCALE DRAWING

UNITS: MM

SIZE: A4

SHEET:

DRAWN BY:

APPROVED BY:

RELEASE LEVEL:

DATE:

DATE:

REVISION:

::kitchensource.com
☎ 1.800.667.8721

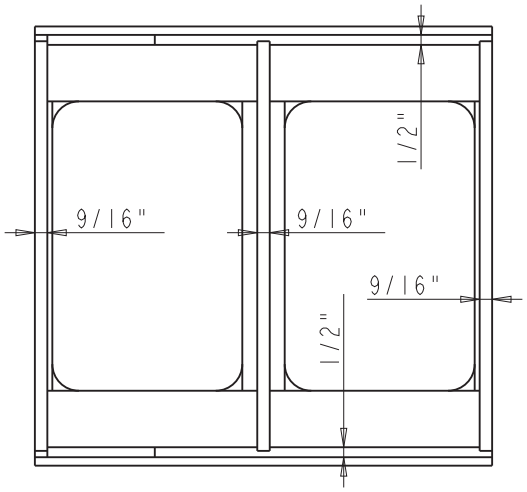

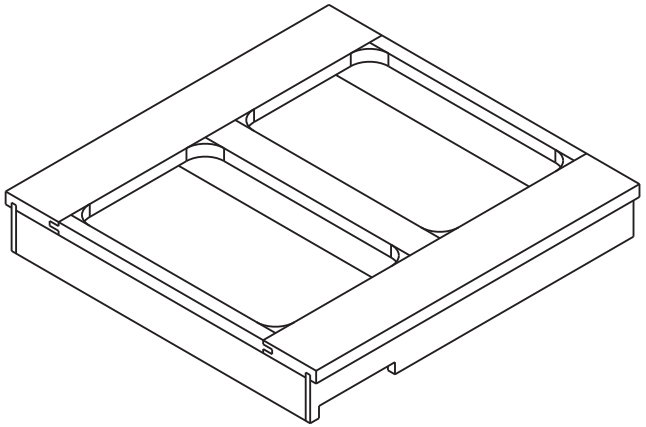

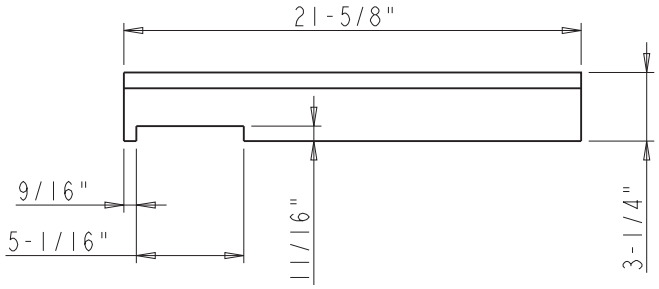

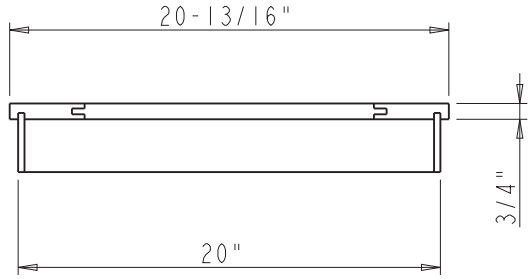

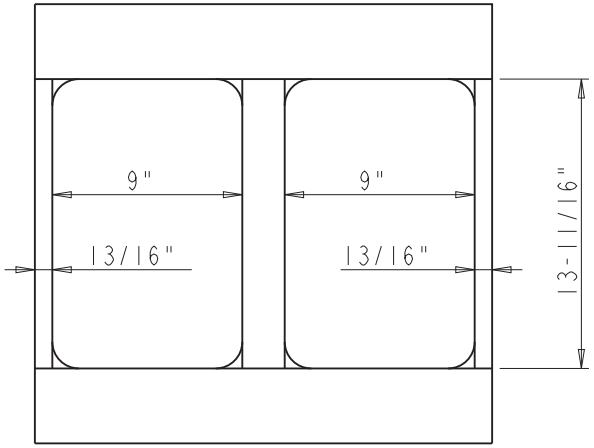

hardware resources	ITEM: FRAME-21	MATERIAL:	
	FINISH:	WEIGHT:	g
PROPRIETARY AND CONFIDENTIAL		PROJECTION	
THE INFORMATION CONTAINED IN THIS DRAWING IS THE SOLE PROPERTY OF HARDWARE RESOURCES INC. ANY REPRODUCTION IN PART OR AS A WHOLE WITHOUT THE WRITTEN PERMISSION OF HARDWARE RESOURCES INC. IS PROHIBITED.	TOLERANCE UNLESS OTHERWISE SPECIFIED: X ±0.20 XX ±0.10 XXX ±0.05 ANGULAR: ±0.5° DO NOT SCALE DRAWING	UNITS: MM	DRAWN BY: / DATE:
		SIZE: A4	APPROVED BY: / DATE:
		SHEET:	RELEASE LEVEL: / REVISION: