Streamline

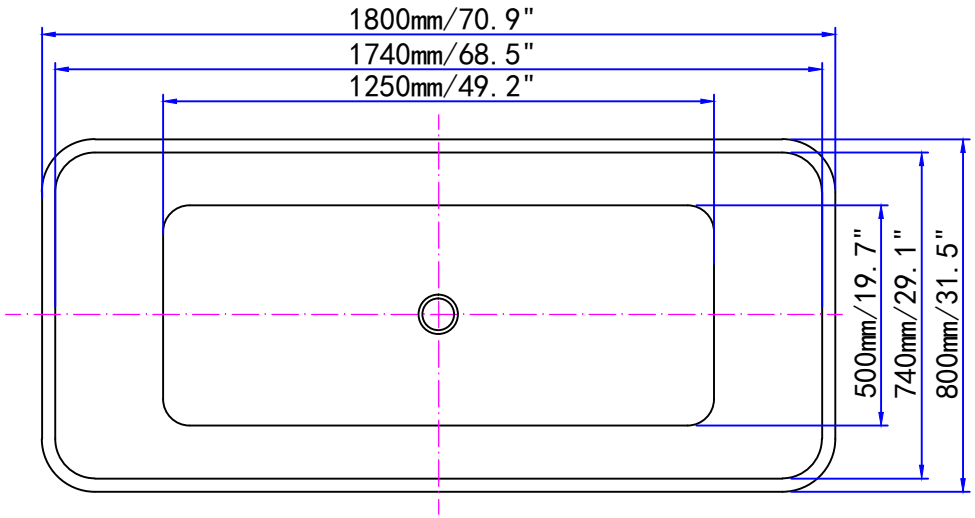


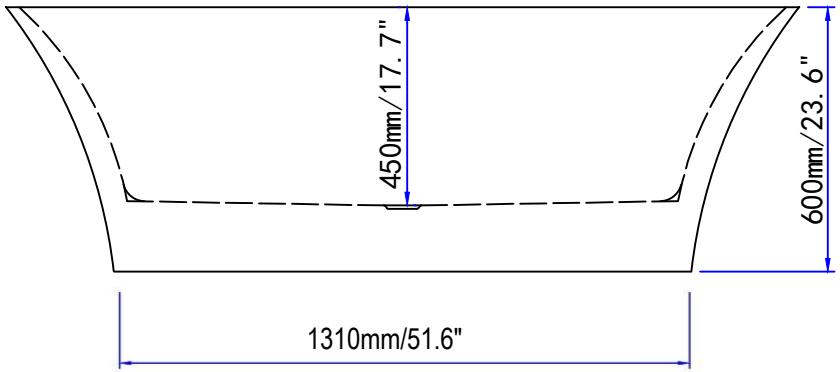


N-1000-71FSWH-FM

kitchensource.com
1.800.667.8721