Streamline

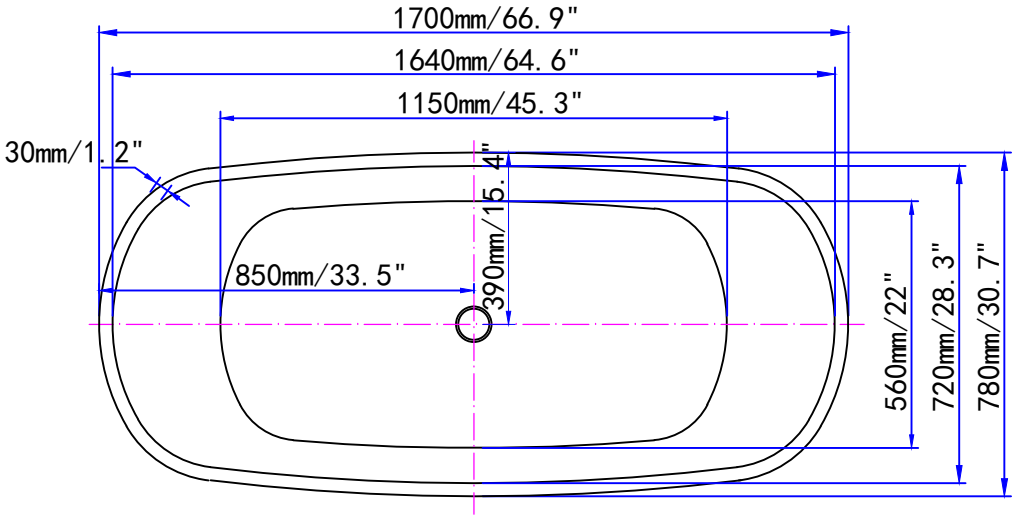

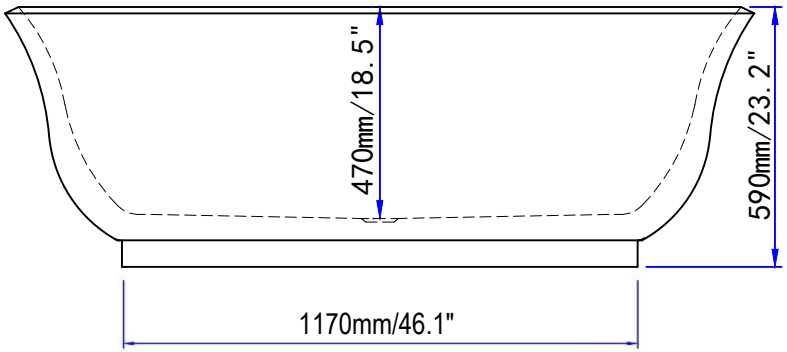

N-663-67FSBL-FM

kitchensource.com
1.800.667.8721